1583. Authorizing certain technical corrections to Adopted Resolution No. 249-2014. (Co. Exec.) WAYS & MEANS

1584. Authorizing certain technical corrections to Adopted Resolution No. 821-2010. (Co. Exec.) WAYS & MEANS

1585. Appropriating funds in connection with the acquisition and implementation of a County Attorney Case Management System (CP 1811). (Co. Exec.) EDUCATION AND INFORMATION TECHNOLOGY

1586. Appropriating funds in connection with Globally Managed Network Protection and Security (CP 1807). (Co. Exec.) EDUCATION AND INFORMATION TECHNOLOGY

1587. Authorizing the determination of just compensation and securing payment thereof in connection with the acquisition of properties by the State of New York to be acquired for public highway purposes, Town of Smithtown, Suffolk County, New York (SCTM No. 0800-133.00-02.00-006.001 p/o). (Co. Exec.) PARKS & RECREATION

1588. Appropriating funds in connection with the Peconic Bay Estuary Program (CP 8235). (Co. Exec.) ENVIRONMENT, PLANNING AND AGRICULTURE

1589. Tax Anticipation Note Resolution No. -2014, Resolution delegating to the County Comptroller the powers to authorize the issuance of not to exceed $105,000,000 Tax Anticipation Notes of the County of Suffolk, New York, in anticipation of the collection of taxes levied for County purposes or returned to the County for collection for the fiscal years commencing January 1, 2011, 2012, 2013 and 2014, and to prescribe the terms, form and contents, and provide for the sale and credit enhancement of such notes. (Co. Exec.) BUDGET AND FINANCE

1590. To readjust, compromise, and grant refunds and chargebacks on correction or errors/County Treasurer by: County Legislature No. 410. (Co. Exec.) BUDGET AND FINANCE

1591. Appropriating funds in connection with Construction of Sidewalks on Various County Roads (CP 5497). (Co. Exec.) PUBLIC WORKS, TRANSPORTATION AND ENERGY

1592. Appropriating funds in connection with Dredging of County Waters at Various Locations (CP 5200). (Co. Exec.) PUBLIC WORKS, TRANSPORTATION AND ENERGY

1593. Appropriating funds in connection with Installation of Guide Rail and Safety Upgrades at Various Locations (CP 5180). (Co. Exec.) PUBLIC WORKS,

TRANSPORTATION AND ENERGY

1594. Authorizing use of the Long Island Maritime Museum by the Rotary Club of Sayville for Annual Beefsteak Fundraiser. (Co. Exec.) PARKS & RECREATION

1595. Authorizing the sale, pursuant to Local Law No. 16-1976, of real property acquired under Section 46 of the Suffolk County Tax Act John Difilippo, as to a 50% interest and Arthur M. Sartoras, as to a 50% interest (SCTM No. 0800-125.00-02.00-005.000). (Co. Exec.) WAYS & MEANS

1596. Amending the 2014 Capital Budget and Program and appropriating funds in connection with the reconstruction of CR 3, Pinelawn Road, Towns of Huntington and Babylon (CP 5510). (Co. Exec.) PUBLIC WORKS, TRANSPORTATION AND ENERGY

1597. Requesting legislative approval of a contract award for renovation, operation, maintenance and management of a restaurant, bar and catering concession at Timber Point County Park, Great River. (Co. Exec.) PARKS & RECREATION

1598. Requesting legislative approval of a contract award for renovation, operation, maintenance and management of a restaurant, bar and catering concession at Charles R. Dominy County Park, West Sayville. (Co. Exec.) PARKS & RECREATION

1599. Authorizing execution of agreement by the Administrative Head of Suffolk County Sewer District No. 3 Southwest and Westbrook Village (IS-1432.1). (Co. Exec.) PUBLIC WORKS, TRANSPORTATION AND ENERGY

1600. Authorizing execution of an agreement by the Administrative Head of SCSD No. 3 – Southwest with 1471 Straight Path (1477.1-007). (Co. Exec.) PUBLIC WORKS, TRANSPORTATION AND ENERGY

1601. Approval of auction rules for the disposition of surplus property acquired under the Suffolk County Tax Act. (Co. Exec.) WAYS & MEANS

1602. To readjust, compromise, and grant refunds and charge-backs on real property correction of errors by: County Legislature (Control No. 966-2014). (Co. Exec.) BUDGET AND FINANCE

1603. Accepting the donation of a Road Warrior Speed/LPR trailer from NDI Recognition Systems for use by the Suffolk County Police Department. (Co. Exec.) PUBLIC SAFETY

1604. Amending the 2014 Operating Budget and appropriating funds in connection with bonding for a settlement for a liability case against the County. (Co. Exec.) BUDGET AND FINANCE

1605. Amending the 2014 Operating Budget and appropriating funds in connection

with bonding for a settlement for medical malpractice case against the County. (Co. Exec.) BUDGET AND FINANCE

1606. Accepting the donation of a 2007 Lexus RX350, Vehicle Identification Number 2T2HK31U07C011141, from the National Insurance Crime Bureau for use by the Suffolk County District Attorney's Office. (Co. Exec.) PUBLIC SAFETY

1607. Accepting and appropriating a grant in the amount of $1,116,067 from the New York State Division of Criminal Justice Services for the Gun Involved Violence Elimination (GIVE) program with 91.84% support. (Co. Exec.) PUBLIC SAFETY

1608. Accepting and appropriating funding in the amount of $40,000 from the U.S. Department of Justice, Federal Bureau of Investigation, for the express purpose of roof repair to an ammunitions bunker located at the Suffolk County Police Department Firearms Range Complex at Westhampton, Suffolk County, New York with 100% support. (Co. Exec.) PUBLIC SAFETY

1609. Amending Resolution No. 536-2008; 100% grant funds for improvements to Hubbard County Park (CP 7128). (Co. Exec.) PARKS & RECREATION

1610. To appoint member of Suffolk County Youth Board Coordinating Council Representing Legislative District No. 1 (Gwynn Schroeder). (Co. Exec.) HUMAN SERVICES

1611. To appoint member of Suffolk County Youth Board Coordinating Council Representing Legislative District No. 2 (Jason Hann). (Co. Exec.) HUMAN SERVICES

1612. To appoint member of Suffolk County Youth Board Coordinating Council Representing Legislative District No. 4 (Phyllis Hill). (Co. Exec.) HUMAN SERVICES

1613. To appoint member of Suffolk County Youth Board Coordinating Council Representing Legislative District No. 8 (Bryan K. Gill). (Co. Exec.) HUMAN SERVICES

1614. To appoint member of Suffolk County Youth Board Coordinating Council Representing Legislative District No. 9 (Stephany Contreras). (Co. Exec.) HUMAN SERVICES

1615. To appoint member of Suffolk County Youth Board Coordinating Council Representing Legislative District No. 11 (Annmarie Larosa). (Co. Exec.) HUMAN SERVICES

1616. To appoint member of Suffolk County Youth Board Coordinating Council Representing Legislative District No. 5 (Alyssa Turano). (Co. Exec.) HUMAN SERVICES

1617. To appoint member of Suffolk County Youth Board Coordinating Council Representing Legislative District No. 12 (Brittany Bienemann). (Co. Exec.) HUMAN SERVICES

1618. To appoint member of Suffolk County Youth Board Coordinating Council Representing Legislative District No. 13 (Deborah Delaney). (Co. Exec.) HUMAN SERVICES

1619. To appoint member of Suffolk County Youth Board Coordinating Council Representing Legislative District No. 18 (Reverend Dr. Larry Washington). (Co. Exec.) HUMAN SERVICES

1620. Adopting Local Law No. -2014, A Local Law to amend, update and reorganize Chapter 528 of the Suffolk County Code to incorporate changes adopted by the State and to facilitate continuing advancements and modifications of the law in the future. (Co. Exec.) PUBLIC SAFETY

1583

Intro. Res. No. -2014 Laid on Table 6/17/2014

Introduced by Presiding Officer, on request of the County Executive

RESOLUTION NO. -2014, AUTHORIZING CERTAIN TECHNICAL CORRECTIONS TO ADOPTED RESOLUTION NO. 249-2014

WHEREAS, the County Legislature has adopted and the County Executive has signed Resolution No. 249-2014; and

WHEREAS, this resolution when adopted contained a technical errors; and

WHEREAS, the County Executive desires a technical corrections to this resolution; now, therefore be it

1st **RESOLVED**, that the Clerk of the Legislature shall make the following technical corrections:

Resolution No. 249-2014

In the 5th **RESOLVED** paragraph, change the Debt Service from [Various Debt Service Funds] to **Fund 001 Debt Service.**

DATED:

APPROVED BY:

_____

County Executive of Suffolk County

Date:

1584

Intro. Res. No. -2014 Laid on Table 6/17/2014

Introduced by Presiding Officer, on request of the County Executive

RESOLUTION NO. -2014, AUTHORIZING CERTAIN TECHNICAL CORRECTIONS TO ADOPTED RESOLUTION NO. 821-2010

WHEREAS, the County Legislature has adopted and the County Executive has signed Resolution No. 821-2010; and

WHEREAS, this resolution when adopted contained technical errors; and

WHEREAS, the County Executive desires technical corrections to this resolution; now, therefore be it

1st **RESOLVED**, that the Clerk of the Legislature shall make the following technical corrections:

Resolution No. 821-2010

Remove the 4th WHEREAS paragraph:

WHEREAS, the County must first instance fund the entire cost of the project and will subsequently be reimbursed for the Federal portion; and

Replace with the following WHEREAS paragraph:

WHEREAS, the County must first instance fund the entire cost of the project and will subsequently be reimbursed for the Federal and/or State Marchiselli portion; and

DATED:

APPROVED BY:

_____

County Executive of Suffolk County

Date:

1585

Intro. Res. No -2014 Laid on Table 6/17/14

Introduced by the Presiding Officer on request of the County Executive

RESOLUTION NO. –2014, APPROPRIATING FUNDS IN CONNECTION WITH THE ACQUISITION AND IMPLEMENTATIONOF A COUNTY ATTORNEY CASE MANAGEMENT SYSTEM (CP 1811)

WHEREAS, the Commissioner of Information Technology has requested funds for the appropriation of funds in connection with the acquisition and implementation of a County Attorney Case Management System; and

WHEREAS, there are sufficient funds within the 2014 Capital Budget and Program to cover the cost of said request and it has been reviewed and appropriated by the Information Processing Steering Committee; and

WHEREAS, Resolution No. 471-1994 as revised by Resolution No. 461-2006, established the use of a priority ranking system, implemented in the Adopted 2014 Capital Budget as the basis for funding capital projects such as this project; and

WHEREAS, the County Legislature, by resolution of even date herewith, has authorized the issuance of $175,000 in Suffolk County Serial Bonds; now, therefore, be it

1st **RESOLVED**, that this Legislature, being the lead agency under the State Environmental Quality Review Act ("SEQRA"), Environmental Conservation Law Article 8, hereby finds and determines that this law constitutes a Type II action, pursuant to Section 617.5 (c) (25) of Title 6 of New York Code of Rules and Regulations ("NYCRR"), in that the resolution concerns purchasing of computer applications and hardware, other than land, radioactive material, pesticides, herbicides or other hazardous materials and the Legislature has no further responsibilities under SEQRA; and be it further

2nd **RESOLVED**, that it is hereby determined that this project, with a priority ranking of forty-one (41) is eligible for approval in accordance with the provisions of Resolution No. 471-1994 as revised by Resolution No. 461-2006;

3rd **RESOLVED**, that the proceeds of $175,000 in Suffolk County Serial Bonds to be and they are hereby appropriated as follows:

Project No:	J.C.	Project Title	Amount
525 –CAP-1811.110 (Fund 001 Debt Service)	17	County Attorney Case Management System	$50,000
525 – CAP – 1811.510 (Fund 001 Debt Service)	17	County Attorney Case Management System	$125,000

DATED:

APPROVED BY:

_____

County Executive of Suffolk County

Date of Approval:

1587

STATEMENT OF FINANCIAL IMPACT
OF PROPOSED SUFFOLK COUNTY LEGISLATION

1. Type of Legislation

Resolution ___X___ Local Law _____ Charter Law _____

2. Title of Proposed Legislation

RESOLUTION NO. –2014, APPROPRIATING FUNDS IN CONNECTION WITH THE ACQUISITION AND IMPLEMENTATION OF A COUNTY ATTORNEY CASE MANAGEMENT SYSTEM (CP 1811)

3. Purpose of Proposed Legislation

See above.

4. Will the Proposed Legislation Have a Fiscal Impact? **Yes** __X__ **No** _____

5. If the answer to item 4 is "yes", on what will it impact? (circle appropriate category)

County **Town** **Economic Impact**

Village **School District** **Other (Specify):**

Library District **Fire District**

6. If the answer to item 5 is "yes", Provide Detailed Explanation of Impact

SERIAL BONDS WILL BE ISSUED TO FINANCE THIS PROJECT. PRINCIPAL AND INTEREST COSTS WILL BE INCURRED OVER THE LIFE OF THE BONDS.

7. Total Financial Cost of Funding over 5 Years on Each Affected Political or Other Subdivision.

SEE ATTACHED DEBT SCHEDULE

8. Proposed Source of Funding

SERIAL BONDS

9. Timing of Impact

IT IS ANTICIPATED THAT BONDS WILL BE ISSUED FALL OF 2014 AND DEBT SERVICE WILL COMMENCE FALL 2015. THERE IS NO FISCAL IMPACT IN 2014.

10. Typed Name & Title of Preparer	11. Signature of Preparer	12. Date
Nicholas Paglia Asst Executive Analyst		June 9, 2014

SCIN FORM 175b (10/95)

FINANCIAL IMPACT
2015 PROPERTY TAX LEVY*
COST TO THE AVERAGE TAXPAYER

1585

GENERAL FUND

	2014 PROPERTY TAX LEVY	2015* COST TO AVG TAXPAYER	2014 AV TAX RATE PER $100	2014 FEV TAX RATE PER $1000
TOTAL	$47,362	$0.09		$0.000

POLICE DISTRICT AND DISTRICT COURT

	2014 PROPERTY TAX LEVY	2015* COST TO AVG TAXPAYER	2014 AV TAX RATE PER $100	2014 FEV TAX RATE PER $1000
TOTAL	$0	$0.00		$0.000

COMBINED

	2014 PROPERTY TAX LEVY	2015* COST TO AVG TAXPAYER	2014 AV TAX RATE PER $100	2014 FEV TAX RATE PER $1000
TOTAL	$47,362	$0.09		$0.000

**** The Estimated 2015 Cost to Average Taxpayer is based upon the 2014 property tax levy and is provided for informational purposes only.***

NOTES:
1) SOURCE FOR NUMBER OF FAMILY PARCELS AND CORRESPONDING ASSESSED VALUATION: SUFFOLK COUNTY REAL PROPERTY, 2013.
2) SOURCE FOR TOTAL TAXABLE ASSESSED VALUATION FOR COUNTY PURPOSES: SCHEDULE A, REPORT OF ASSESSED VALUATION FOR 2013-2014.
3) SOURCE FOR EQUALIZATION RATES: 2013 COUNTY EQUALIZATION RATES ESTABLISHED BY THE NEW YORK STATE BOARD OF EQUALIZATION AND ASSESSMENTS.

To be completed by the Executive Budget Office

Suffolk County

General Obligation Serial Bonds
Level Debt

1585

Term of Bonds	4
Amount to Bond:	$175,000

Date	Coupon	Principal	Interest	Total Debt Service	Fiscal Debt Service
11/1/2015					
11/1/2016	3.000%	$41,674.02	$5,687.50	$47,361.52	$47,361.52
			$2,166.55	$2,166.55	
11/1/2017	3.000%	$43,028.42	$2,166.55	$45,194.97	$47,361.52
			$1,467.34	$1,467.34	
11/1/2018	3.000%	$44,426.85	$1,467.34	$45,894.18	$47,361.52
			$745.40	$745.40	
11/1/2019	4.000%	$45,870.72	$745.40	$46,616.12	$47,361.52
11/1/2020		$175,000.00	$14,446.06	$189,446.06	$189,446.06
11/1/2021					
11/1/2022					
11/1/2023					
11/1/2024					
11/1/2025					
11/1/2026					
11/1/2027					
11/1/2028					
11/1/2029					
11/1/2030					
11/1/2031					
11/1/2032					
11/1/2033					

1585

2014 INTERGOVERNMENTAL RELATIONS
MEMORANDUM OF SUPPORT

DEPARTMENT OF INFORMATION TECHNOLOGY

TITLE OF BILL: **CP 1811 – County Attorney Case Management System**

PURPOSE OR GENERAL IDEA OF BILL:
The County Attorney's office for the purchasing of the software from CourtAlert. The County Attorney is looking to track and process its legal cases with an online system that will allow for collaboration between lawyers, paralegals and administrative staff. It will also permit the ability for bureau chiefs to review cases online without having to locate physical files from the individual lawyers. The elimination of physical case files will result in less storage and archival space required.

SUMMARY OF SPECIFIC PROVISIONS:
The department will be able to manage cases and ensure that the County is able to process and defend itself through all lawsuits brought against the County. The result should be more cost effective use of County Attorney resources. At this time the new County Attorney will evaluate whether or not to proceed with this Case Management System.

JUSTIFICATION:
Licensing and maintenance costs should be offset by an increase in productivity

FISCAL IMPLICATIONS:
Appropriation of funding $175,000

COUNTY OF SUFFOLK

1585

STEVEN BELLONE
SUFFOLK COUNTY EXECUTIVE

DEPARTMENT OF INFORMATION TECHNOLOGY
NORTH COUNTY COMPLEX BLDG. 50
P.O. BOX 6100
HAUPPAUGE, NY 11788-0099
FAX (631) 853-4979

DOUGLAS A. MILLER
ACTING Commissioner/
Director of Management Information
(631) 853-4758

TO: Jon Schneider, Deputy County Executive

FROM: Douglas A. Miller, Acting Commissioner of Information Technology

DATE: May 30, 2014

SUBJECT: Capital Project # 1811 – COUNTY ATTORNEY CASE MANAGEMENT SYSTEM

We are forwarding a draft resolution requesting appropriation of $175,000 for the year 2014. The resolution amount represents the monies that will be provided by Capital Project # 1811. An email version of the resolution was sent to CE RESO REVIEW saved under the title "Reso-ITS-CP-1811-CA CaseMgt".

Program Description: The County Attorney's office for the purchasing of the software from CourtAlert. The County Attorney is looking to track and process its legal cases with an online system that will allow for collaboration between lawyers, paralegals and administrative staff. It will also permit the ability for bureau chiefs to review cases online without having to locate physical files from the individual lawyers. The elimination of physical case files will result in less storage and archival space required.

Operating Budget Impact: The department will be able to manage cases and ensure that the County is able to process and defend itself through all lawsuits brought against the County. The result should be more cost effective use of County Attorney resources.

DAM/ dmc
Attachments: Draft Resolution
Statement of Financial Impact
Request for Introduction of Suffolk Legislation

cc: Dennis M. Cohen, Chief Deputy County Executive
Lisa Santeramo, Assistant Deputy County Executive
Tom Vaughn, Director of Intergovernmental Relations

1586

Intro. Res. No. -2014 Laid on Table 6/17/14

Introduced by Presiding Officer on request of the County Executive

RESOLUTION NO. -2014, APPROPRIATING FUNDS IN CONNECTION WITH GLOBALLY MANAGED NETWORK PROTECTION AND SECURITY (CP 1807)

WHEREAS, the Commissioner of Information Technology has requested the appropriation of funds in connection Globally Managed Network Protection and Security; and

WHEREAS, there are sufficient funds within the 2014 Capital Budget and Program to cover the cost of said request and it has been reviewed and approved by the Information Processing Steering Committee; and

WHEREAS, Resolution No. 471-1994 as revised by Resolution No. 461-2006, established the use of a priority ranking system, implemented in the Adopted 2014 Capital Budget as the basis for funding capital projects such as this project; and

WHEREAS, the County Legislature, by resolution of even date herewith has authorized the issuance of $500,000 in Suffolk County Serial Bonds; now, therefore, be it

1st **RESOLVED**, that this Legislature, being the lead agency under the State Environmental Quality Review Act ("SEQRA"), Environmental Conservation Law Article 8, hereby finds and determines that this law constitutes a Type II action, pursuant to Section 617.5 (C) (25) of Title 6 of New York Code of Rules and Regulations ("NYCRR"), in that the resolution concerns purchasing of computer applications and hardware, other than land, radioactive material, pesticides, herbicides or other hazardous materials and the Legislature has no further responsibilities under SEQRA; and be it further

2nd **RESOLVED**, that it is hereby determined that this project, with a priority ranking of thirty-two (32), is eligible for approval in accordance with the provisions of Resolution No. 471-1994 as revised by Resolution No. 461-2006; and be it further

3rd **RESOLVED**, that the proceeds of the $500,000 in Suffolk County Serial Bonds be and are hereby appropriated as follows:

Project No.	Project Title	Amount
525-CAP-1807.110 (Fund 016 Debt Service)	Globally Managed Network Protection and Security	$150,000
525-CAP-1807.510 (Fund 016 Debt Service)	Globally Managed Network Protection and Security	$350,000

DATED:

APPROVED BY:

_____

County Executive of Suffolk County

Date of Approval:

1586

STATEMENT OF FINANCIAL IMPACT
OF PROPOSED SUFFOLK COUNTY LEGISLATION

1. Type of Legislation

Resolution ___X___ Local Law _____ Charter Law _____

2. Title of Proposed Legislation

RESOLUTION NO. -2014, APPROPRIATING FUNDS IN CONNECTION WITH GLOBALLY MANAGED NETWORK PROTECTION AND SECURITY (CP 1807)

3. Purpose of Proposed Legislation

See above.

4. Will the Proposed Legislation Have a Fiscal Impact? **Yes** __X__ **No** _____

5. If the answer to item 4 is "yes", on what will it impact? (circle appropriate category)

County **Town** **Economic Impact**

Village **School District** **Other (Specify):**

Library District **Fire District**

6. If the answer to item 5 is "yes", Provide Detailed Explanation of Impact

SERIAL BONDS WILL BE ISSUED TO FINANCE THIS PROJECT. PRINCIPAL AND INTEREST COSTS WILL BE INCURRED OVER THE LIFE OF THE BONDS.

7. Total Financial Cost of Funding over 5 Years on Each Affected Political or Other Subdivision.

SEE ATTACHED DEBT SCHEDULE

8. Proposed Source of Funding

SERIAL BONDS

9. Timing of Impact

IT IS ANTICIPATED THAT BONDS WILL BE ISSUED FALL OF 2014 AND DEBT SERVICE WILL COMMENCE FALL 2015. THERE IS NO FISCAL IMPACT IN 2014.

10. Typed Name & Title of Preparer	11. Signature of Preparer	12. Date
Nicholas Paglia Asst Executive Analyst		June 9, 2014

SCIN FORM 175b (10/95)

FINANCIAL IMPACT
2015 PROPERTY TAX LEVY*
COST TO THE AVERAGE TAXPAYER

1586

GENERAL FUND

	2014 PROPERTY TAX LEVY	2015* COST TO AVG TAXPAYER	2014 AV TAX RATE PER $100	2014 FEV TAX RATE PER $1000
TOTAL	**$110,427**	**$0.21**		$0.000

POLICE DISTRICT AND DISTRICT COURT

	2014 PROPERTY TAX LEVY	2015* COST TO AVG TAXPAYER	2014 AV TAX RATE PER $100	2014 FEV TAX RATE PER $1000
TOTAL	**$0**	**$0.00**		$0.000

COMBINED

	2014 PROPERTY TAX LEVY	2015* COST TO AVG TAXPAYER	2014 AV TAX RATE PER $100	2014 FEV TAX RATE PER $1000
TOTAL	**$110,427**	**$0.21**		$0.000

**** The Estimated 2015 Cost to Average Taxpayer is based upon the 2014 property tax levy and is provided for informational purposes only.***

NOTES:
1) SOURCE FOR NUMBER OF FAMILY PARCELS AND CORRESPONDING ASSESSED VALUATION: SUFFOLK COUNTY REAL PROPERTY, 2013.
2) SOURCE FOR TOTAL TAXABLE ASSESSED VALUATION FOR COUNTY PURPOSES: SCHEDULE A, REPORT OF ASSESSED VALUATION FOR 2013-2014.
3) SOURCE FOR EQUALIZATION RATES: 2013 COUNTY EQUALIZATION RATES ESTABLISHED BY THE NEW YORK STATE BOARD OF EQUALIZATION AND ASSESSMENTS.

To be completed by the Executive Budget Office

Suffolk County

1586

General Obligation Serial Bonds
Level Debt

Term of Bonds	5
Amount to Bond:	$500,000

Date	Coupon	Principal	Interest	Total Debt Service	Fiscal Debt Service
11/1/2015					
11/1/2016	3.000%	$93,427.25	$17,000.00	$110,427.25	$110,427.25
			$6,911.74	$6,911.74	
11/1/2017	3.000%	$96,603.77	$6,911.74	$103,515.51	$110,427.25
			$5,269.47	$5,269.47	
11/1/2018	3.000%	$99,888.30	$5,269.47	$105,157.77	$110,427.25
			$3,571.37	$3,571.37	
11/1/2019	4.000%	$103,284.50	$3,571.37	$106,855.87	$110,427.25
			$1,815.53	$1,815.53	
11/1/2020	4.000%	$106,796.18	$1,815.53	$108,611.71	$110,427.25
11/1/2021		$500,000.00	$52,136.23	$552,136.23	$552,136.23
11/1/2022					
11/1/2023					
11/1/2024					
11/1/2025					
11/1/2026					
11/1/2027					
11/1/2028					
11/1/2029					
11/1/2030					
11/1/2031					
11/1/2032					
11/1/2033					

1586

2014 INTERGOVERNMENTAL RELATIONS
MEMORANDUM OF SUPPORT

DEPARTMENT OF INFORMATION TECHNOLOGY

TITLE OF BILL: **CP 1807 – GLOBALLY MANAGED NETWORK PROTECTION AND SECURITY**

PURPOSE OR GENERAL IDEA OF BILL:
This project is for the Countywide Security Network to secure and support the collection of raw data from all Security Architecture (Firewalls, IPS, Web and Email Gateways, Select Domain Controllers, SSL VPN Appliances, Citrix Netscaler's and Core Routers and switches) within Suffolk County ingress and egress locations. This log data will be run thru correlation engines which will identify patterns of behavior on traffic flow. Components will incorporate the tools needed for intrusion detection, interception and remediation of malicious network behavior. Hardware and Software will enable IT Administrators to coordinate and synchronize operations for all County sensitive information that can be compromised. The software and hardware will limit the spread of virus attacks, impede hackers and stop spyware/malware from occurring.

SUMMARY OF SPECIFIC PROVISIONS:
Benefits to the County will be for the Countywide timely reaction to potential security breaches and will reduce the cost of downtime, rebuilding systems, loss of data and services due to the continuous and growing threats from malicious and destructive activity by cyber criminals. This will reduce the potential for millions of dollars in lost productivity.

JUSTIFICATION:
This comprehensive system will curtail these threats and minimize potential damage, guard against external sources from entering into the County's Network infrastructure.

FISCAL IMPLICATIONS:
Appropriation of funding $500,000

1586

Capitol Project #1807 Expenditures 2015-2017

2015 – 2017: $90,000 annually to conduct County Wide Vulnerability Assessments to identify and close vulnerabilities for the Internal & External County Networks and specific Web Applications, this also includes an assessment of HIPAA Compliance Laws for Privacy and Security for the Health Department.

2015 - $120,000 to build-out the Dennison building Security System with Swipe Card access to all floors working areas and LAN/WAN Equipment rooms and add a security camera on every floors elevator landing area.

2016-2017 - $80,000 annually to build out Access Control Systems to support securing all LAN/WAN Equipment closets in all County Areas.

COUNTY OF SUFFOLK

1586

STEVEN BELLONE
SUFFOLK COUNTY EXECUTIVE

DEPARTMENT OF INFORMATION TECHNOLOGY
NORTH COUNTY COMPLEX BLDG. 50
P.O. BOX 6100
HAUPPAUGE, NY 11788-0099
FAX (631) 853-4979

DOUGLAS A. MILLER
ACTING Commissioner/
Director of Management Information
(631) 853-4758

TO: Jon Schneider, Deputy County Executive

FROM: Douglas A. Miller, Acting Commissioner of Information Technology

DATE: June 9, 2014

SUBJECT: Capital Project # 1807 – Globally Managed Network Protection And Security

We are forwarding a draft resolution requesting appropriation of $ 500,000 for the year 2014. The resolution amount represents the monies that will be provided by CP-1807 for Capital Project # 1807. An email version of the resolution was sent to CE RESO saved under the title "Reso-ITS-CP1807-GlobalMgmt."

Program Description: This project is for the Countywide Security Network to secure and support the collection of raw data from all Security Architecture (Firewalls, IPS, Web and Email Gateways, Select Domain Controllers, SSL VPN Appliances, Citrix Netscaler's and Core Routers and switches) within Suffolk County ingress and egress locations. This log data will be run thru correlation engines which will identify patterns of behavior on traffic flow. Components will incorporate the tools needed for intrusion detection, interception and remediation of malicious network behavior. Hardware and Software will enable IT Administrators to coordinate and synchronize operations for all County sensitive information that can be compromised. The software and hardware will limit the spread of virus attacks, impede hackers and stop spyware/malware from occurring.

Operating Budget Impact: This program will have a positive operating budget impact as it will proactively upgrade the Countywide Security Network.

DAM/dmc
Attachments: Draft Resolution
Statement of Financial Impact
Request for Introduction of Suffolk Legislation

cc: Dennis M. Cohen, Chief Deputy County Executive
Lisa Santeramo, Assistant Deputy County Executive
Tom Vaughn, Director of Intergovernmental Relations

Intro Res. No. 1587-14 Laid on Table 6/17/14

Introduced by Presiding Officer on request of the County Executive

RESOLUTION NO. – 2014, AUTHORIZING THE DETERMINATION OF JUST COMPENSATION AND SECURING PAYMENT THEREOF IN CONNECTION WITH THE ACQUISITION OF PROPERTIES BY THE STATE OF NEW YORK TO BE ACQUIRED FOR PUBLIC HIGHWAY PURPOSES, TOWN OF SMITHTOWN, SUFFOLK COUNTY, NEW YORK. (SCTM: 0800-133.00-02.00-006.001 P/O)

WHEREAS, the County of Suffolk presently owns a certain parcel of real property on the northern side of New York State Route 347, Town of Smithtown, Suffolk County, New York, said parcel having a Suffolk County Tax Map Identification Number of District 0800 Section 133.00 Block 02.00 Lot 006.001; and

WHEREAS, the parcel of real property described above was previously dedicated and is currently used by the County of Suffolk for parkland purposes; and

WHEREAS, the parcel of real property described above cannot be alienated without the express approval of the New York State Legislature; and

WHEREAS, the New York State Department of Transportation, in conjunction with its Project Identification Number (PIN) 0054.45, by Notice of Appropriation Filed in the Office of the Suffolk County Clerk on 04/03/2014 at Liber D00012769, Page 316 acquired a portion of the subject parcel in fee simple along with a permanent easement and a thirty (36) month temporary easement on the property described above for the purpose of highway reconstruction as is reflected on the taking map(s) annexed hereto and referred to hereafter as the "subject parcels"; and

WHEREAS, under the New York State Eminent Domain Procedure Law the County of Suffolk is entitled to just compensation for the taking of the parcel as is reflected on the proposed taking maps and descriptions annexed hereto; and

WHEREAS, New York State Department of Transportation has offered the County of Suffolk the sum of Five Hundred Forty Seven Thousand & 00/100 ($547,000.00) Dollars as and for just compensation for its appropriation; and

WHEREAS, the County of Suffolk has conducted an evaluation of the monetary offer made by the New York State Department of Transportation and has determined that said sum does constitute the proper amount of just compensation for said appropriation; now therefore, be it:

1. RESOLVED, that this Legislature, being the lead agency under the State Environmental Quality Review Act (SEQRA) Env. Con. Law Art. 8, hereby finds and determines that this resolution constitutes a Type II action pursuant to Volume 6 of the New York Code of Rules and Regulations (NYCRR) Section 617.5(c) (20) and (27) in that the Resolution concerns routine or continuing agency administration, not including new programs or major reordering of priorities that may affect the environment, and adoption of a local legislative decision in connection with the same; as a Type II action, the Legislature has no further responsibilities under SEQRA; and be it further

2. **RESOLVED**, that the Commissioner of the Suffolk County Department of Parks, Recreation & Conservation, or his Designee be and hereby is hereby authorized, empowered, and directed to take such actions as may be necessary and appropriate to determine and accept the amount of just compensation for the subject parcel and execute any and all documents to secure payment thereof except that no instruments of alienation may be executed, and be it further

3. **RESOLVED**, that in all proceedings pursuant to Articles 4, 5, and 6 of the Eminent Domain Procedure Law, the County Attorney, his Deputies and Assistant County Attorneys be and they hereby are authorized to appear for and represent the County of Suffolk in all courts having jurisdiction thereof; and be it further

4. **RESOLVED**, that the County Attorney, his Deputies and Assistant County Attorneys be and they hereby are authorized and permitted to file claims and suits for just compensation as well as compromise, adjust, and settle any such claims and suits for just compensation where said claims and suits have been filed pursuant to Articles 5 and 6 of the Eminent Domain Procedure Law; such settlements, compromises and adjustment to be made in open sessions of the court having jurisdiction thereof.

5. **RESOLVED**, that in the event that one or more Suffolk County Tax Map Identification Numbers contained in this Resolution has been deleted or removed, or has been changed by either subsequent technical modification of the Suffolk County Tax Map System, or prior technical modification that was unknown to the Suffolk County Department of Parks, Recreation & Conservation at the time at which said Exhibit was prepared, the Tax Map Designation shall be deemed to include such successor Tax Map Identification Number as represents the parcel to be acquired and certified in writing by the Director of the Suffolk County Department of Parks, Recreation & Conservation, and further, the Tax Map Designation shall be deemed to include those blocks and lots located in the same section listed therein, which blocks and lots may not be listed therein.

DATED:

APPROVED BY:

_____

County Executive of Suffolk County

Date of Approval:

STATEMENT OF FINANCIAL IMPACT
OF PROPOSED SUFFOLK COUNTY LEGISLATION

1587

1. Type of Legislation

Resolution X Local Law _____ Charter Law ____

2. Title of Proposed Legislation

AUTHORIZING THE DETERMINATION OF JUST COMPENSATION AND SECURING PAYMENT THEREOF IN CONNECTION WITH THE ACQUISITION OF PROPERTIES BY THE STATE OF NEW YORK TO BE ACQUIRED FOR PUBLIC HIGHWAY PURPOSES, TOWN OF SMITHTOWN, SUFFOLK COUNTY, NEW YORK. (SCTM: 0800-133.00-02.00-006.001 P/O)

3. Purpose of Proposed Legislation

See # 2.

4. Will the Proposed Legislation Have a Fiscal Impact? Yes X No _____

5. If the answer to item 4 is "yes", on what will it impact? (circle appropriate category)

County Town Economic Impact

Village School District Other (Specify):

Library District Fire District

6. If the answer to item 5 is "yes", Provide Detailed Explanation of Impact

The resolution calls for the County to receive five hundred forty seven thousand ($547,000) in compensation.

7. Total Financial Cost of Funding over 5 Years on Each Affected Political or Other Subdivision.

N/A

8. Proposed Source of Funding

N/A

9. Timing Impact

10. Typed Name & Title of Preparer	11. Signature of Preparer	12. Date
Terry Maccarrone Coordinator of Community Based Programs Dept. of Parks, Recreation &Conservation	Terry Maccarrone	05/07/2104

SCIN FORM 175b (10/95) Page 1 of 1

Debra Kolyer
Principal Financial Analyst 6/6/14

1587

FINANCIAL IMPACT
2014 PROPERTY TAX LEVY
COST TO THE AVERAGE TAXPAYER

GENERAL FUND

	2014 PROPERTY TAX LEVY	2014 COST TO AVG TAXPAYER	2014 FEV TAX RATE PER $1000
TOTAL		$0.00	$0.000

POLICE DISTRICT AND DISTRICT COURT

	2014 PROPERTY TAX LEVY	2014 COST TO AVG TAXPAYER	2014 FEV TAX RATE PER $1000
TOTAL		$0.00	$0.000

COMBINED

	2014 PROPERTY TAX LEVY	2014 COST TO AVG TAXPAYER	2014 FEV TAX RATE PER $1000
TOTAL		$0.00	$0.000

NOTES:
1) SOURCE FOR NUMBER OF FAMILY PARCELS AND CORRESPONDING ASSESSED VALUATION: SUFFOLK COUNTY REAL PROPERTY, SEPTEMBER 2012.
2) SOURCE FOR TOTAL TAXABLE ASSESSED VALUATION FOR COUNTY PURPOSES: SCHEDULE A, REPORT OF ASSESSED VALUATION FOR 2012-2013.
3) SOURCE FOR EQUALIZATION RATES: TENTATIVE 2012 COUNTY EQUALIZATION RATES ESTABLISHED BY THE NEW YORK STATE BOARD OF EQUALIZATION AND ASSESSMENTS.

To be completed by the Executive Budget Office

COUNTY OF SUFFOLK

1587

STEVEN BELLONE
SUFFOLK COUNTY EXECUTIVE

DEPARTMENT OF
PARKS, RECREATION AND CONSERVATION

GREG DAWSON
COMMISSIONER

2014 INTERGOVERNMENTAL RELATIONS MEMORANDUM OF SUPPORT

TITLE OF BILL: AUTHORIZING THE DETERMINATION OF JUST COMPENSATION AND SECURING PAYMENT THEREOF IN CONNECTION WITH THE ACQUISITION OF PROPERTIES BY THE STATE OF NEW YORK TO BE ACQUIRED FOR PUBLIC HIGHWAY PURPOSES, TOWN OF SMITHTOWN, SUFFOLK COUNTY, NEW YORK. (SCTM: 0800-133.00-02.00-006.001 P/O)

PURPOSE OR GENERAL IDEA OF BILL: To authorize the determination of just compensation and securing payment thereof in connection with the acquisition of properties by the State of New York to be acquired for New York State highway purposes, Town of Smithtown, Suffolk County, New York (SCTM: 0800-133.00-02.00-006.001 P/O).

SUMMARY OF SPECIFIC PROVISIONS: The New York State Department of Transportation, in conjunction with its Project Identification Number (PIN) 0054.45, by Notice of Appropriation Filed in the Office of the Suffolk County Clerk on 04/03/2014 at Liber D00012769, Page 316 acquired a portion of the subject parcel in fee simple along with a permanent easement and a thirty (36) month temporary easement on the property described above for the purpose of highway reconstruction as is reflected on the taking map(s). The County of Suffolk is entitled to just compensation for the taking of the parcel. This resolution authorizes the County to accept the compensation.

JUSTIFICATION: Allowing the New York State to complete its highway project will have a positive impact on the population of Suffolk County and facilitate travel and traffic flow. This resolution assists New York State in more readily completing its project.

FISCAL IMPLICATIONS: The County will receive five hundred forty seven thousand dollars ($547,000.00) as and for just compensation.

MONTAUK HIGHWAY – P.O. BOX 144 WEST SAYVILLE, NEW YORK 11796-0144 (631) 854-4949 FAX: (631) 854-4977

SUFFOLK COUNTY PARKS

1587

NEW YORK STATE
DEPARTMENT OF TRANSPORTATION
ACQUISITION MAP

PIN 0054.05

HAUPPAUGE - PORT JEFFERSON
SH 9376

MAP NO. 1311
PARCELS NO. 1363, 1364
SHEET 1 OF 3 SHEETS

MAP REFERENCE INFORMATION:
Map of Hallock Acres Town of Smithtown LI
P/O Lots # 1-8, South Avenue (Not Opened)
Filed December 31, 1909
File No. 425

NYSPCS L I ZONE (3104) NAD 83/CORS 07
Parcel Locator Point:
Parcel No: 1363
N: 75310.540
E: 369335.933
Parcel No: 1364
N: 75384.518
E: 369463.885

COUNTY OF SUFFOLK
(REPUTED OWNER)

TRN 146

PARCEL SUMMARY:
Type: TE
Portion of 2012 Tax Map
(Revised 5/3/2011)
Ref. No. 0800-133.00-02.00-006.001
Town of Smithtown
County of Suffolk
State of New York

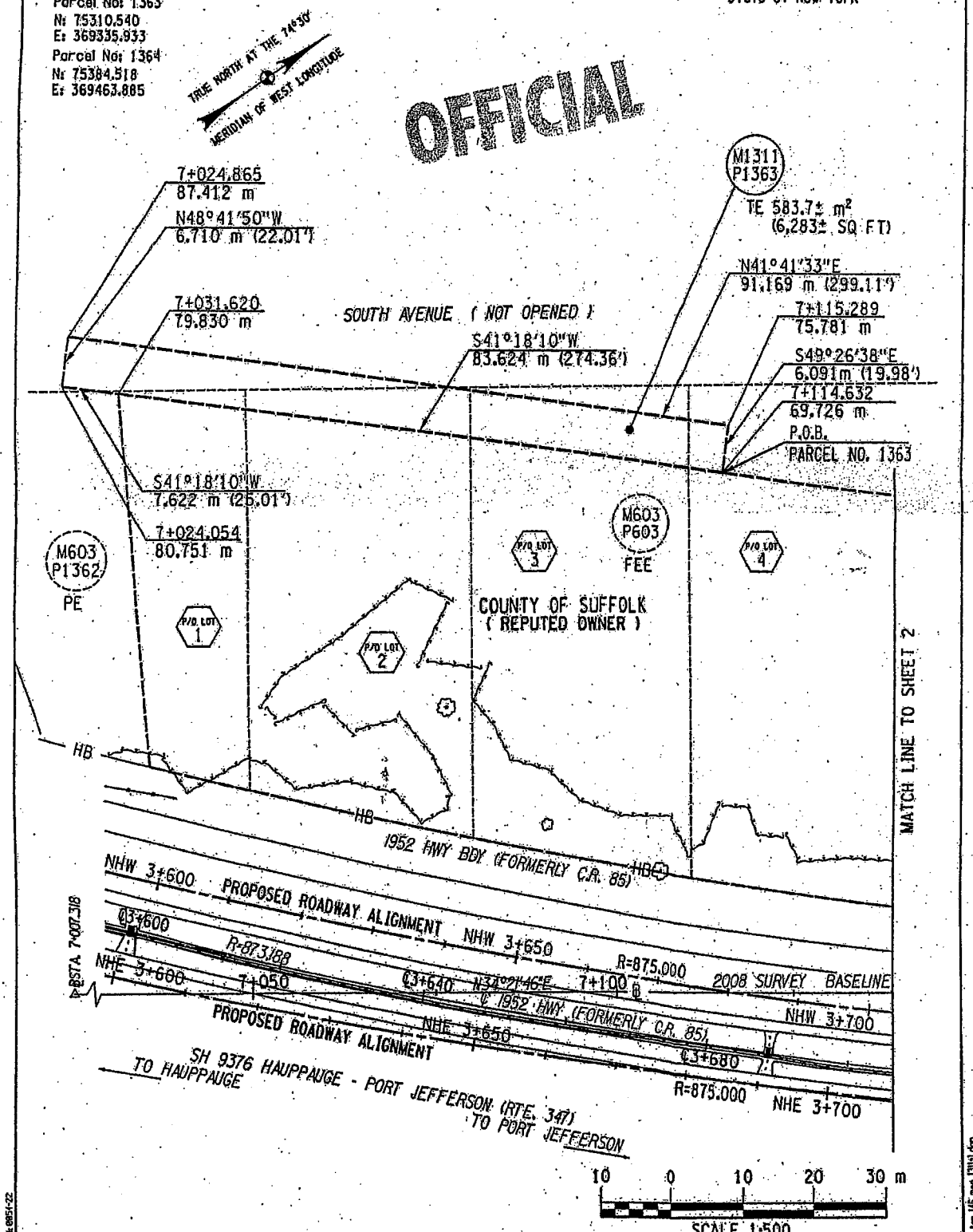

PROJECT PIN 0054-22

PREPARED BY MARGARITA BRUSILOVSKY CHECKED BY ALFRED BARCENILLA FINAL CHECK BY GREGORY PETERMAN

1587

NEW YORK STATE
DEPARTMENT OF TRANSPORTATION
ACQUISITION MAP

PIN 0054.05

HAUPPAUGE - PORT JEFFERSON
SH 9376

MAP NO. 1311
PARCELS NO. 1363, 1364
SHEET 2 OF 3 SHEETS

MAP REFERENCE INFORMATION:
Map of Hallock Acres Town of Smithtown LI
P/O Lots # 1-8, South Avenue (Not Opened)
Filed December 31, 1909
File No. 425

NYSPCS L I ZONE (3104) NAD 83/CORS 07
Parcel Locator Point:
Parcel No: 1363
N: 75310.540
E: 369335.933
Parcel No: 1364
N: 75384.518
E: 369463.885

COUNTY OF SUFFOLK
(REPUTED OWNER)

TRN 146

PARCEL SUMMARY:
Type: TE
Portion of 2012 Tax Map
(Revised 5/3/2011)
Ref. No. 0800-133.00-02.00-006.001
Town of Smithtown
County of Suffolk
State of New York

OFFICIAL

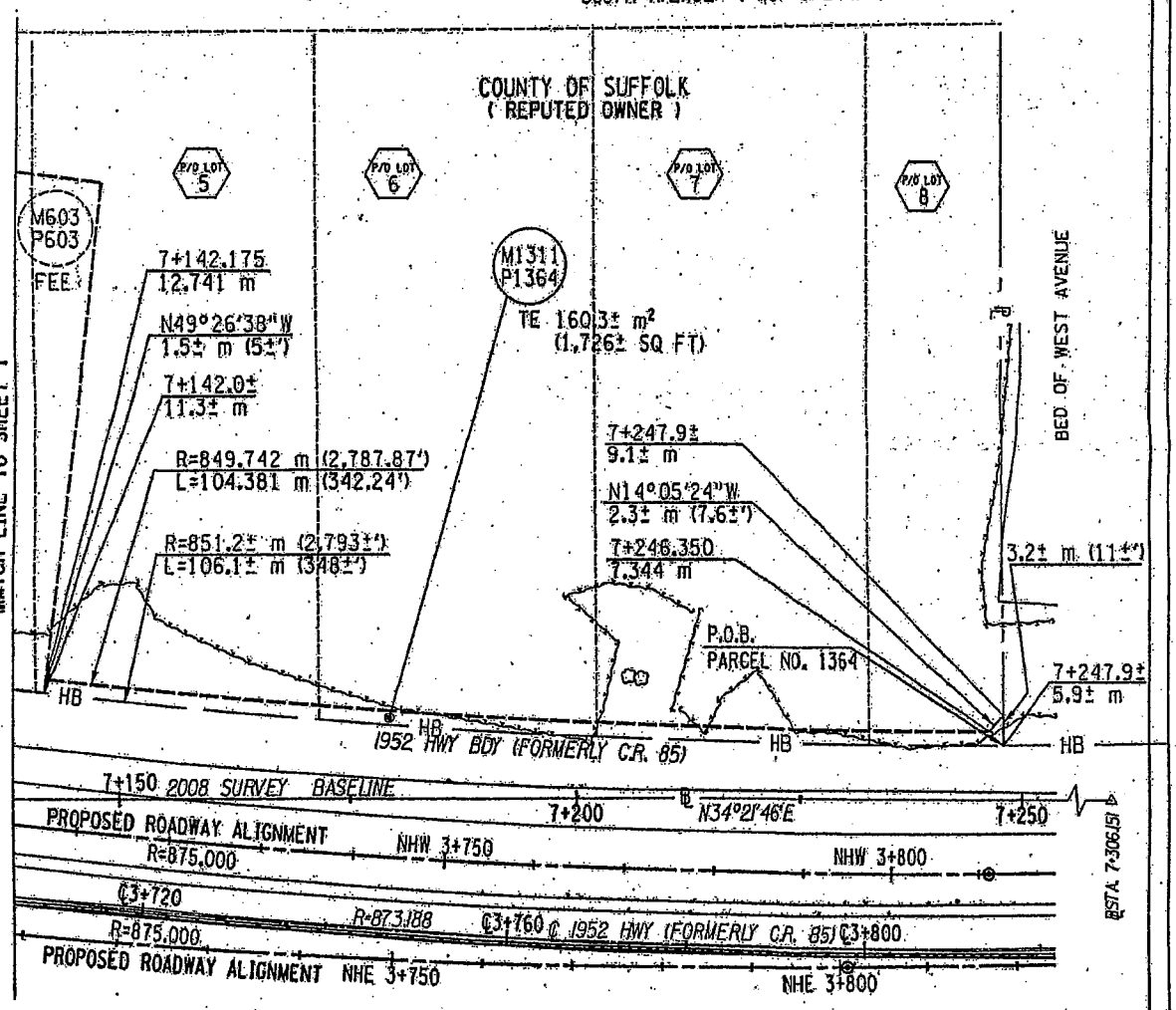

SH 9376 HAUPPAUGE - PORT JEFFERSON (RTE. 347)
TO HAUPPAUGE TO PORT JEFFERSON

10 0 10 20 30 m

SCALE 1:500
ONE METER EQUALS 3.28083333333 FEET.
ONE SQUARE METER EQUALS 10.7638673611 SQUARE FEET.

PROJECT PIN 0054-22

PREPARED BY MARGARITA BRUSILOVSKY CHECKED BY ALFRED BARCENILLA FINAL CHECK BY GREGORY PETERMAN

1587

NEW YORK STATE
DEPARTMENT OF TRANSPORTATION
ACQUISITION MAP

PIN 0054.05

HAUPPAUGE - PORT JEFFERSON
SH 9376

MAP NO. 1311
PARCELS NO. 1363, 1364
SHEET 3 OF 3 SHEETS

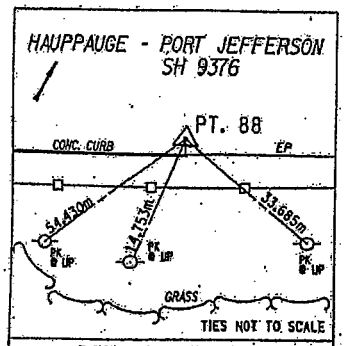

BSTA. 7+007.318
P.K. 0.87m North of curb
in asph. shoulder of RTE. 347
NYSPCS L I ZONE (3104) NAD 83/07
N: 75182.5987
E: 369332.9194

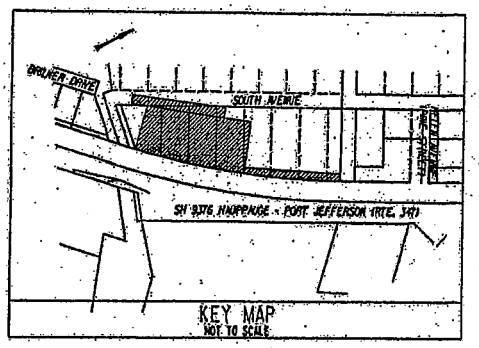

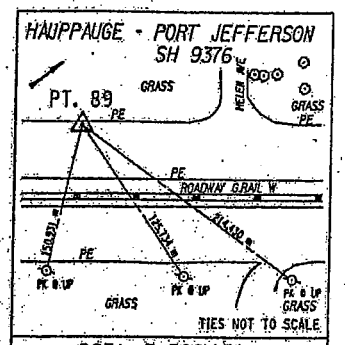

BSTA. 7+306.151
P.K. 0.195m South of PE
on RTE. 347
NYSPCS L I ZONE (3104) NAD 83/07
N: 75429.2800
E: 369501.5905

TEMPORARY EASEMENT FOR WORK AREA

A temporary easement to be exercised in, on and over the property delineated above for the purpose of a work area for use and exercisable during the construction or reconstruction of the highway and terminating upon the approval of the completed work, unless sooner terminated if deemed no longer necessary for highway purposes and released by the Commissioner of Transportation or other authorized representative acting for the People of the State of New York, or its assigns. Such easement shall be exercised in and to all that piece or parcel of property designated as Parcels No. 1363 and 1364, as shown on the accompanying map.

RESERVING, however, to the owner of any right, title, or interest in and to the property above delineated and such owner's successors or assigns, the right of access and the right of using said property and such use shall not be further limited or restricted under this easement beyond that which is necessary to effectuate its purposes for the construction or reconstruction of the herein identified project.

I hereby certify that the property mapped above is necessary for this project, and the acquisition thereof is recommended.

Date June 7, 2013

Mark Bocamazo

Mark Bocamazo, P.E., Regional Design Engineer for the Regional Director of Transportation Region No. 10

STATE OF NEW YORK
GREGORY DAVID PETERMAN
050213
LICENSED LAND SURVEYOR

"Unauthorized alteration of a survey map bearing a licensed land surveyor's seal is a violation of the New York State Education Law."

I hereby certify that this map was prepared in accordance with current NYSDOT policies, standards and procedures.

Date June 6 2013

Gregory D. Peterman, Land Surveyor
P.L.S. License No. 050213

COUNTY OF SUFFOLK
(Reputed Owner)

Total Te Area = 744.0± m²
(8,009± SQ FT)

Map of property in and to which an easement as hereinabove defined is deemed necessary by the Commissioner of Transportation to be acquired by appropriation in the name of the People of the State of New York for purposes connected with the highway system of the State of New York pursuant to Section 30 of the Highway Law and the Eminent Domain Procedure Law.

There is excepted from this appropriation all the right, title and interest, if any, of the United States of America in or to said property.

Pursuant to the statute(s) set forth above and the authority delegated to me by Official Order of the Commissioner of Transportation, this acquisition map is hereby approved and filed in the main office of the New York State Department of Transportation.

Date MAR 11 2014

Office of Right-of-Way

I have compared the foregoing copy of the map with the original thereof, as filed in the Office of the State Department of Transportation, and I do hereby certify the same to be a true and correct copy of the original and of the whole thereof.

Office of Right of Way

PROJECT PIN 0054-22

PREPARED BY MARGARITA BRUSILOVSKY CHECKED BY ALFRED BARCENILLA FINAL CHECK BY GREGORY PETERMAN

005422_Te_tm_146_map_1311-2.dgn

1587

SUFFOLK COUNTY CLERK
RECORDS OFFICE
RECORDING PAGE

Type of Instrument: APPROPRIATIONS
Number of Pages: 2
Receipt Number : 14-0042441
TRANSFER TAX NUMBER: 13-22648

Recorded: 04/03/2014
At: 10:03:42 AM

LIBER: D00012769
PAGE: 316

District:	Section:	Block:	Lot:
0800	133.00	02.00	006.001

EXAMINED AND CHARGED AS FOLLOWS

Deed Amount: $0.00

Received the Following Fees For Above Instrument

		Exempt			Exempt
Page/Filing	$0.00	YES	CERT FEE	$0.00	YES
TP-584	$0.00	YES	Cert.Copies	$0.00	YES
Transfer tax	$0.00	YES			
			Fees Paid	$0.00	

TRANSFER TAX NUMBER: 13-22648

THIS PAGE IS A PART OF THE INSTRUMENT
THIS IS NOT A BILL

JUDITH A. PASCALE
County Clerk, Suffolk County

63

1587

1	2

Number of pages 2

This document will be public record. Please remove all Social Security Numbers prior to recording.

RECORDED
2014 Apr 03 10:03:42 AM
JUDITH A. PASCALE
CLERK OF
SUFFOLK COUNTY
L D00012769
P 316
DT# 13-22648

Deed / Mortgage Instrument	Deed / Mortgage Tax Stamp	Recording / Filing Stamps

3 FEES

Page / Filing Fee	10 —		Mortgage Amt.
Handling	20. 00		1. Basic Tax
TP-584			2. Additional Tax
Notation			Sub Total
EA-52 17 (County)		Sub Total	Spec./Assit. or Spec./Add.
EA-5217 (State)			TOT. MTG.TAX
R.P.T.S.A.	—		Dual Town ____ Dual County ____
Comm. Of Ed.	5. 00		Held for Appointment
Affidavit			Transfer Tax
Certified Copy			Mansion Tax
NYS Surcharge	15. 00	Sub Total	The property covered by this mortgage is or will be improved by a one or two family dwelling only.
Other			YES ____ or NO ____
		Grand Total 0	If NO, see appropriate tax clause on Page # ____ of this instrument. 4/3/14

4	Dist 0800	Section 133.00	Block 02.00	Lot 006.001

5 Community Preservation Fund

Real Property Tax Service Agency Verification — REAL PROPERTY TAX SERVICE AGENCY SUFFOLK COUNTY 04-03-14 LR

Consideration Amount $ ____

CPF Tax Due $ ____

6 Satisfactions/Discharges/Releases List Property owners Mailing Address
RECORD & RETURN TO:

File Civil Court Actions: Doc Rm. File 154930
Suffolk County Clerk
Riverhead, NY

Improved ____
Vacant Land ____
TD ____
TD ____
TD ____

Mail to: Judith A. Pascale, Suffolk County Clerk
310 Center Drive, Riverhead, NY 11901
www.suffolkcountyny.gov.clerk

7 Title Company Information
Co.Name Exempt
Title #

8 **Suffolk County Recording & Endorsement Page**

This page forms part of the attached Notice of Appropriation made by:
(SPECIFY TYPE OF INSTRUMENT)

County of Suffolk.

the premises herein is situated in
SUFFOLK COUNTY, NEW YORK.

TO
N.Y.S. Department of Transportation – Office of Right of Way
250 Veterans Memorial Highway -Rm 6A10
Hauppauge, NY 11788

In the TOWN of Smithtown
In the VILLAGE
or HAMLET of

BOXES 6 THRU 8 MUST BE TYPED OR PRINTED IN BLACK INK ONLY PRIOR TO RECORDING OR FILING.

(over)

(SECTION A)

1587

NEW YORK STATE DEPARTMENT OF TRANSPORTATION
OFFICE OF RIGHT OF WAY

APPROPRIATION OF PROPERTY
BY THE PEOPLE OF THE STATE OF NEW YORK

PROJECT:
SH 9376
Hauppauge - Port Jefferson
PIN: 005405
PROC: 13433
Suffolk County
Town of Smithtown

MAP NOS.:
603, 1311

PARCEL NOS.:
603, 1362; 1363, 1364

NOTICE OF APPROPRIATION

Pursuant to the statute set forth in the above maps
TO:

1. County of Suffolk, Attn: Steven Bellone, County Executive, 100 Veterans Highway PO Box 6100, Hauppauge, NY 11788
2.
3.
4.
5.
6.
7.
8.

TAKE NOTICE that on the 11th day of March 2014 there was filed in the office of the Department of Transportation a certified copy of each of the above designated maps of property; and that on the 3rd day of April 2014, there was filed in the office of the clerk of the county, in which such property is situated, a copy of each such maps.

TAKE FURTHER NOTICE that title to the property, easements, interests or rights set forth in said maps vested in the People of the State of New York upon such filing in the office of said county clerk.

COMMISSIONER OF TRANSPORTATION
OF THE STATE OF NEW YORK

Dated: 4/3/14

By: Mary Ann Bell
Director, Right of Way

COUNTY CLERK'S CERTIFICATE OF FILING OF MAPS

State of New York) SS.:
County of Suffolk)

I hereby certify that on the 3rd day of April, 20 14, the Commissioner of Transportation caused a copy of each of the maps referred to in the above notice of appropriation, to be filed in this office.

(SEAL)
Dated: 4/3/14

Judith A. Pascale
County Clerk

COUNTY CLERK'S CERTIFICATE OF FILING AND RECORDING OF NOTICE OF APPROPRIATION

State of New York)
County of Suffolk) SS.:

I hereby certify that on the 3rd day of April, 20 14, the Commissioner of Transportation caused the above notice of appropriation to be filed and recorded in this office.

(SEAL)
Dated: 4/3/14

Judith A. Pascale
County Clerk

COUNTY OF SUFFOLK

1587

STEVEN BELLONE
SUFFOLK COUNTY EXECUTIVE

DEPARTMENT OF PUBLIC WORKS

PHILIP A. BERDOLT
DEPUTY COMMISSIONER

GILBERT ANDERSON, P.E.
COMMISSIONER

DARNELL TYSON, P.E.
DEPUTY COMMISSIONER

MEMORANDUM

TO: Geoffrey Mascaro
Property Management Administrator

FROM: Teresa A. Allar, Senior Review Appraiser
NYS Certified RE General Appraiser
ID# 46-48438

DATE: May 7, 2014

SUBJECT: NYS Condemnations of Suffolk County Property
0800-133-02- 006.001

The Suffolk County owned property was purchased by the county in 1974 as part of the Smithtown Greenbelt Preservation Area.

As requested, I have reviewed NYS's offer of $547,000 for the acquisition of 63,724SF in Fee (Parcel 603), 14,086SF as a Permanent Easement (Parcel 1362) and 1,726SF as a Temporary Easement, for a 36 month period (Parcel 1364).

Upon thorough review and analysis, I find the Offer of Settlement to be acceptable as reflective of market value and of fair and just compensation. The offer of $547,000 is acceptable and approved accordingly.

COUNTY OF SUFFOLK

1587

STEVE BELLONE
SUFFOLK COUNTY EXECUTIVE

DEPARTMENT OF
PARKS, RECREATION AND CONSERVATION

GREG DAWSON
COMMISSIONER

TO: **JON SCHNEIDER, Deputy County Executive**

FROM: **GREG DAWSON, Commissioner**

CC: **DENNIS M. COHEN, Chief Deputy County Executive**
LISA SANTERAMO, Assistant Deputy County Executive
TOM VAUGHN, Director of Intragovernmental Relations

DATE: **May 7, 2014**

RE: **AUTHORIZING THE DETERMINATION OF JUST COMPENSATION AND SECURING PAYMENT THEREOF IN CONNECTION WITH THE ACQUISITION OF PROPERTIES BY THE STATE OF NEW YORK TO BE ACQUIRED FOR PUBLIC HIGHWAY PURPOSES, TOWN OF SMITHTOWN, SUFFOLK COUNTY, NEW YORK. (SCTM: 0800-133.00-02.00-006.001 P/O)**

Enclosed please find a draft resolution and supporting documentation relative to the above-captioned. An e-mail version of this resolution was sent to CE RESO REVIEW under the file name "RESO-PKS-NYS Condemnation of County-Owned Parkland.doc."

Should you require anything further, please contact my office at 4-4984.

Enclosures

MONTAUK HIGHWAY – P.O. BOX 144 WEST SAYVILLE, NEW YORK 11796-0144 (631) 854-4949 FAX: (631) 854-4977

SUFFOLK COUNTY PARKS

1588

Intro. Reso. No. - 2014 Laid on the Table 6/17/14

Introduced by Presiding Officer on request of the County Executive

RESOLUTION NO. - 2014, APPROPRIATING FUNDS IN CONNECTION WITH THE PECONIC BAY ESTUARY PROGRAM (CP 8235)

WHEREAS, the Commissioner of Health Services has requested the appropriation of funds for the Peconic Bay Estuary Program; and

WHEREAS, these funds will purchase replacement equipment used for marine monitoring of the Peconic Estuary; and

WHEREAS, the equipment request includes funds to replace a 34' Webbers Cove vessel with a more flexible 28' vessel, replacement engines for the existing 23' Parker vessel, and marine monitoring devices (Sondes); and

WHEREAS, there are sufficient funds within the 2014 Capital Budget and Program to cover the cost of said request under Capital Program Number 8235; and

WHEREAS, Resolution No. 471-1994 and as amended by Resolution No. 461-2006 has established a priority ranking system as the basis for funding Capital Projects such as this project;

WHEREAS, the County Legislature, by resolution of even date herewith, has authorized the issuance of $225,000 in Suffolk County Serial Bonds; now, therefore be it

1st **RESOLVED**, that this Legislature, being the lead agency under the State Environmental Quality Review Act ("SEQRA"), Environmental Conservation Law Article 8, hereby finds and determines that this law constitutes a Type II action, pursuant to Section 617.5 (C) 25, since the action involves the purchase or sale of furnishing, equipment or supplies, other than land, radioactive material, pesticides, herbicides or other hazardous materials, and the Legislature has no further responsibilities under SEQRA; and be it further

2nd **RESOLVED**, that it is hereby determined that this project, with a priority ranking of sixty (60) is eligible for approval in accordance with the provisions of Resolution No. 471-1994 and as amended by Resolution No. 461-2006; and be it further

3rd **RESOLVED**, that the proceeds of $225,000 in Suffolk County Serial Bonds be and they hereby are appropriated as follows:

Project Number	J.C.	Project Title	Amount
525-CAP-8235.519 (Fund 001 Debt Service)	40	Peconic Bay Estuary Program	$225,000

DATED:

APPROVED BY:

_____

County Executive of Suffolk County

Date of Approval:

1588

STATEMENT OF FINANCIAL IMPACT
OF PROPOSED SUFFOLK COUNTY LEGISLATION

1. Type of Legislation

Resolution ___X___ Local Law _____ Charter Law _____

2. Title of Proposed Legislation

RESOLUTION NO. - 2014, APPROPRIATING FUNDS IN CONNECTION WITH THE PECONIC BAY ESTUARY PROGRAM (CP 8235)

3. Purpose of Proposed Legislation

See above.

4. Will the Proposed Legislation Have a Fiscal Impact? **Yes** __X__ **No** _____

5. If the answer to item 4 is "yes", on what will it impact? (circle appropriate category)

County **Town** **Economic Impact**

Village **School District** **Other (Specify):**

Library District **Fire District**

6. If the answer to item 5 is "yes", Provide Detailed Explanation of Impact

SERIAL BONDS WILL BE ISSUED TO FINANCE THIS PROJECT. PRINCIPAL AND INTEREST COSTS WILL BE INCURRED OVER THE LIFE OF THE BONDS.

7. Total Financial Cost of Funding over 5 Years on Each Affected Political or Other Subdivision.

SEE ATTACHED DEBT SCHEDULE

8. Proposed Source of Funding

SERIAL BONDS

9. Timing of Impact

IT IS ANTICIPATED THAT BONDS WILL BE ISSUED FALL OF 2014 AND DEBT SERVICE WILL COMMENCE FALL 2015. THERE IS NO FISCAL IMPACT IN 2014.

10. Typed Name & Title of Preparer	11. Signature of Preparer	12. Date
Nicholas Paglia Asst Executive Analyst		June 10, 2014

SCIN FORM 175b (10/95)

FINANCIAL IMPACT
2015 PROPERTY TAX LEVY*
COST TO THE AVERAGE TAXPAYER

1588

GENERAL FUND

	2014 PROPERTY TAX LEVY	2015* COST TO AVG TAXPAYER	2014 AV TAX RATE PER $100	2014 FEV TAX RATE PER $1000
TOTAL	$49,692	$0.10		$0.000

POLICE DISTRICT AND DISTRICT COURT

	2014 PROPERTY TAX LEVY	2015* COST TO AVG TAXPAYER	2014 AV TAX RATE PER $100	2014 FEV TAX RATE PER $1000
TOTAL	$0	$0.00		$0.000

COMBINED

	2014 PROPERTY TAX LEVY	2015* COST TO AVG TAXPAYER	2014 AV TAX RATE PER $100	2014 FEV TAX RATE PER $1000
TOTAL	$49,692	$0.10		$0.000

**** The Estimated 2015 Cost to Average Taxpayer is based upon the 2014 property tax levy and is provided for informational purposes only.***

NOTES:
1) SOURCE FOR NUMBER OF FAMILY PARCELS AND CORRESPONDING ASSESSED VALUATION: SUFFOLK COUNTY REAL PROPERTY, 2013.
2) SOURCE FOR TOTAL TAXABLE ASSESSED VALUATION FOR COUNTY PURPOSES: SCHEDULE A, REPORT OF ASSESSED VALUATION FOR 2013-2014.
3) SOURCE FOR EQUALIZATION RATES: 2013 COUNTY EQUALIZATION RATES ESTABLISHED BY THE NEW YORK STATE BOARD OF EQUALIZATION AND ASSESSMENTS.

To be completed by the Executive Budget Office

1588

Suffolk County

General Obligation Serial Bonds
Level Debt

Term of Bonds	5
Amount to Bond:	$225,000

Date	Coupon	Principal	Interest	Total Debt Service	Fiscal Debt Service
11/1/2015					
11/1/2016	3.000%	$42,042.26	$7,650.00	$49,692.26	$49,692.26
			$3,110.28	$3,110.28	
11/1/2017	3.000%	$43,471.70	$3,110.28	$46,581.98	$49,692.26
			$2,371.26	$2,371.26	
11/1/2018	3.000%	$44,949.74	$2,371.26	$47,321.00	$49,692.26
			$1,607.12	$1,607.12	
11/1/2019	4.000%	$46,478.03	$1,607.12	$48,085.14	$49,692.26
			$816.99	$816.99	
11/1/2020	4.000%	$48,058.28	$816.99	$48,875.27	$49,692.26
11/1/2021		$225,000.00	$23,461.30	$248,461.30	$248,461.30
11/1/2022					
11/1/2023					
11/1/2024					
11/1/2025					
11/1/2026					
11/1/2027					
11/1/2028					
11/1/2029					
11/1/2030					
11/1/2031					
11/1/2032					
11/1/2033					

1588

COUNTY OF SUFFOLK

STEVEN BELLONE
SUFFOLK COUNTY EXECUTIVE

DEPARTMENT OF HEALTH SERVICES

JAMES L. TOMARKEN, MD, MPH, MBA, MSW
Commissioner

Memorandum

To: Diane Weyer
Principal Financial Analyst

From: Walter Dawydiak, Jr., P.E., J.D. WD
Director – Division of Environmental Quality

Date: May 12, 2014

Subject: *Request for Introductory Resolution for Adopted 2014 CP 8235 - Peconic Estuary Program (PEP) — $225,000*

I request drafting of an Introductory Resolution for the Adopted 2014 CP 8235. The resolution would appropriate $225,000 to replace the following equipment:

a) An aging diesel sampling vessel that is currently in use (34' Webbers Cove) with a more flexible 28' Parker Extended Cabin powered by twin fuel efficient 4-stroke outboards- estimated at $165,000.
b) A replacement 250 HP outboard engine for the 23' Parker sampling vessel- estimated at $20,000.
c) Replacement of 6 marine monitoring devices (Sondes)- estimated at $40,000

Project Description:
This funding request for $225,000 will be used for a capital purchase as part of the PEP marine monitoring program. At present, surface water quality monitoring is performed at over 35 marine stations, throughout the Peconic Estuary under the PEP. Samples are routinely collected for a variety of physical, chemical, and biological parameters, including temperature, secchi depth, irradiance, dissolved oxygen, salinity, conductivity, pH, nutrients (various nitrogen & phosphorous compounds), coliform bacteria, suspended solids, chlorophyll-a, and Aureococcus (the "brown tide" organism). To accomplish this, a versatile 28' Parker Extended Cabin powered by twin fuel efficient 4-stroke outboards is a suitable and practical replacement. Additionally, because the new Parker will have outboards engines as opposed to an inboard engine, it will be able to reach areas of the Peconic Bay system that the aging Webbers Cove could not.

PublicHealth
Prevent. Promote. Protect.

DIVISION OF ENVIRONMENTAL QUALITY
Office of the Division Director
360 Yaphank Ave. - Suite 2B, Yaphank, NY 11980
(631) 852-5804 Fax (631) 852-5825

1588

* The existing 34' diesel powered Webbers Cove sampling vessel is getting older (purchased in 1986) and reaching the end of its serviceable life. It was originally purchased to monitor the Peconic Estuary waters in relation to impacts from the devastating blooms of "brown tide". Although reliable in the past, it has begun to deteriorate to the point that it poses a safety hazard.

* The existing 23' Parker sampling vessel was purchased in 2007 and allows for more shallow water access. The current outboard has nearly 1500 hours and is approaching the end of its serviceable life.

* The Sondes will be replacing 6 existing ones that are no longer operational. Once deployed, these devices remain underwater (~6 months) and measure water quality parameters continuously at 15 minute intervals. They are instrumental in documenting diurnal hypoxic (lack of oxygen) events that may occur at various times throughout the deployment period.

WD.kn

C: Barry S Paul, Deputy Commissioner
Liza Wright, Senior Budget Analyst
Chris Lubicich, PE – Office of Ecology
Michael Jensen – Office of Ecology
Alison Branco, PhD – Office of Ecology/PEP

1588

2014 Intergovernmental Relations
Memorandum of Support

TITLE OF BILL: Appropriating funds in connection with the Peconic Bay Estuary Program (CP 8235).

PURPOSE OR GENERAL IDEA OF BILL: This legislation is needed to appropriate funds to capital project 8235 and will be used to replace a 34' vessel with a more flexible 28' vessel, replace engines for the existing 23' Parker vessel, and replace marine monitoring devices (Sondes).

SUMMARY OF SPECIAL PROVISIONS: None.

JUSTIFICATION: This Resolution is needed to appropriate funds to capital project 8235. These funds will be used to replace a 34' Webbers Cove vessel with a more flexible 28' vessel. The Webbers Cove was purchased in 1986 and has been deteriorating to the point that it poses a safety hazard. Engines for the existing 23' Parker vessel are needed to replace engines purchased in 2007 that have over 1,500 hours on them and they are at the end of their serviceable life. Also, replace marine monitoring devices (Sondes) that are no longer operational. These sondes remain underwater and measure water quality parameters continuously at 15 minute intervals.

FISCAL IMPLICATIONS: Serial bonds and related debt service.

COUNTY OF SUFFOLK

1588

STEVEN BELLONE
SUFFOLK COUNTY EXECUTIVE

DEPARTMENT OF HEALTH SERVICES

JAMES L. TOMARKEN, MD, MPH, MBA, MSW
Commissioner

May 19, 2014

Jon Schneider, Deputy County Executive
County Executive's Office, 12th Floor
H. Lee Dennison Building
Veterans Memorial Highway
Hauppauge, NY 11788-0099

Dear Mr. Schneider:

I request the introduction of the enclosed Resolution to appropriate funds in connection with the Peconic Bay Estuary Program (CP 8235). This legislation is needed to appropriate funds to capital project 8235 and will be used to replace a 34' vessel with a more flexible 28' vessel, replace engines for the existing 23' Parker vessel, and replace marine monitoring devices (Sondes). All are used for the marine monitoring program in the Peconic Estuary.

I enclose a financial impact statement and other back-up documentation for this Resolution. If you have any questions on the enclosed, please call Walter Dawydiak at 2-5800. Also, an e-mail version of this Resolution was sent to CE RESO REVIEW and the file name is "Reso-HSV-CP 8235 PEP.doc."

Sincerely,

James L. Tomarken, MD, MPH, MBA, MSW
Commissioner

Enclosures

C: Dennis M. Cohen, Chief Deputy County Executive
Thomas Vaughn, Director of Intragovernmental Relations
Lisa Santeramo, Assistant Deputy County Executive
Barry S. Paul, Deputy Commissioner
Jennifer L. Culp, Assistant to the Commissioner of Health Services
Walter Dawydiak, P.E., Director of Environmental Quality
Diane E. Weyer, Principal Financial Analyst

PublicHealth
Prevent. Promote. Protect.

OFFICE OF THE COMMISSIONER
3500 Sunrise Highway, Suite 124, P. O. Box 9006, NY 11739-9006
Phone (631) 854-0000 Fax (631) 854-0108

Intro. Res. No. 1589-2014 Laid on Table 6/17/2014
Introduced by Presiding Officer, on request of the County Executive

TAX ANTICIPATION NOTE RESOLUTION NO. -2014

RESOLUTION DELEGATING TO THE COUNTY COMPTROLLER THE POWERS TO AUTHORIZE THE ISSUANCE OF NOT TO EXCEED $105,000,000 TAX ANTICIPATION NOTES OF THE COUNTY OF SUFFOLK, NEW YORK, IN ANTICIPATION OF THE COLLECTION OF TAXES LEVIED FOR COUNTY PURPOSES OR RETURNED TO THE COUNTY FOR COLLECTION FOR THE FISCAL YEARS COMMENCING JANUARY 1, 2011, 2012, 2013 AND 2014, AND TO PRESCRIBE THE TERMS, FORM AND CONTENTS, AND PROVIDE FOR THE SALE AND CREDIT ENHANCEMENT OF SUCH NOTES

THE COUNTY LEGISLATURE OF THE COUNTY OF SUFFOLK, NEW YORK, HEREBY RESOLVES AS FOLLOWS:

Section 1. Pursuant to the provisions of the Local Finance Law, constituting Chapter 33-a of the Consolidated Laws of the State of New York (herein called the "Law"), the power to authorize the issuance of Tax Anticipation Notes (herein called the "Notes") of the County of Suffolk, in the State of New York (the "County" and "State", respectively), in the aggregate principal amount of not to exceed $105,000,000, and any notes in renewal thereof, is hereby delegated to the County Comptroller, as chief fiscal officer of the County.

Section 2. The following matters are hereby determined and declared:

(a) The Notes shall be issued in anticipation of the collection of real estate taxes levied for County purposes or returned to the County for collection for the fiscal years commencing January 1, 2011, 2012, 2013 and 2014.

(b) No notes have heretofore been authorized or issued in anticipation of the collection of said taxes, other than the $300,000,000 Tax Anticipation Notes for 2014 Taxes –dated and issued on December 17, 2013 and the $110,000,000 Tax Anticipation Notes for 2014 Taxes - dated and issued on January 3, 2014.

(c) Said Notes shall mature within the period of one year from the date of their issuance, and may be renewed from time to time in accordance with the provisions of the Law.

(d) Not less than $105,000,000 of the taxes specified in Section 2(a) hereof remains uncollected as of the date hereof.

Section 3. The Notes shall contain the recital of validity prescribed by Section 52.00 of the Law and shall be general obligations of the County, and the faith and credit of the County shall be pledged to the punctual payment of the principal of and interest on the Notes and, unless the Notes are otherwise paid or payment provided for, an amount sufficient for such payment shall be inserted in the budget of the County and a tax sufficient to provide for the payment thereof shall be levied and collected.

Section 4. Subject to the provisions of this resolution and the Law, and pursuant to Sections 50.00, 56.00, 60.00, and 168.00 of the Law, inclusive, the powers to prescribe the terms, form and contents, and all other powers or duties pertaining or incidental to the sale and issuance of the Notes authorized pursuant hereto, or any renewals thereof, including the powers to enter into one or more letter of credit agreements or liquidity facility agreements for the Notes, are hereby delegated to the County Comptroller, as chief fiscal officer of the County.

Section 5. This resolution shall take effect immediately.

DATED:

APPROVED BY:

_____

County Executive of Suffolk County

Date:

1589

STATEMENT OF FINANCIAL IMPACT
OF PROPOSED SUFFOLK COUNTY LEGISLATION

1. Type of Legislation

Resolution __x__ Local Law _____ Charter Law _____

2. Title of Proposed Legislation

Delegating to the County Comptroller of the County of Suffolk, New York, the power to authorize the issuance of and to sell not exceeding $105,000,000 Tax Anticipation Notes of said County in anticipation of the collection of real estate taxes levied for County purposes or returned to the County for collection for the fiscal years commencing January 1, 2011, 2012, 2013 and 2014 and to prescribe the terms, form and contents, and provide for the sale and credit enhancement of such notes

3. Purpose of Proposed Legislation

To issue delinquent tax anticipation notes for cash flow purposes, as we have done for the past number of years. The current 2014 cash flow anticipates revenue of $100,000,000 in such tax anticipation notes. The resolution has been written to provide sufficient latitude in principal should revenue trends decline resulting in the cash flow requiring a larger infusion of funds.

4. Will the Proposed Legislation Have a Fiscal Impact? **Yes** __x__ **No** ___

5. If the answer to item 4 is "yes", on what will it impact? (circle appropriate category)

County	**Town**	**Economic Impact**
Village	**School District**	**Other (Specify):**
Library District	**Fire District**	

6. If the answer to item 5 is "yes", Provide Detailed Explanation of Impact

Since these notes will be issued to mature in September 2015 impact would be to the County's 2015 operating budget. TANs will be issued during September 2014 for the four most current fiscal tax years. The estimated "gross" interest cost for the maturing note is estimated to be approximately $2,000,000. ($100,000,000 x 2.00% gross coupon for 12 months.)

It is anticipated that a premium may be bid by the underwriters. Thus, it is currently expected that the net interest cost for the notes could be approximately 1.00%.

7. Total Financial Cost of Funding over 5 Years on Each Affected Political or Other Subdivision.

Gross Interest cost in 2015 for the notes = $2,000,000.

8. Proposed Source of Funding

Tax Anticipation Notes

9. Timing of Impact

12 months September 2015

10. Typed Name & Title of Preparer	11. Signature of Preparer	12. Date
Geraldine Olson Municipal Finance Administrator	Geraldine Olson	May 19, 2014

SCIN FORM 175b (10/95)

Colleen Capece
Special Projects Coordinator

CLCapece

5-29-14

1589

FINANCIAL IMPACT
2014 PROPERTY TAX LEVY
COST TO THE AVERAGE TAXPAYER

GENERAL FUND

	2014 PROPERTY TAX LEVY	2014 COST TO AVG TAXPAYER	2014 FEV TAX RATE PER $1000
TOTAL		$0.00	$0.000

POLICE DISTRICT AND DISTRICT COURT

	2014 PROPERTY TAX LEVY	2014 COST TO AVG TAXPAYER	2014 FEV TAX RATE PER $1000
TOTAL		$0.00	$0.000

COMBINED

	2014 PROPERTY TAX LEVY	2014 COST TO AVG TAXPAYER	2014 FEV TAX RATE PER $1000
TOTAL		$0.00	$0.000

NOTES:
1) SOURCE FOR NUMBER OF FAMILY PARCELS AND CORRESPONDING ASSESSED VALUATION: SUFFOLK COUNTY REAL PROPERTY, SEPTEMBER 2012.
2) SOURCE FOR TOTAL TAXABLE ASSESSED VALUATION FOR COUNTY PURPOSES: SCHEDULE A, REPORT OF ASSESSED VALUATION FOR 2012-2013.
3) SOURCE FOR EQUALIZATION RATES: TENTATIVE 2012 COUNTY EQUALIZATION RATES ESTABLISHED BY THE NEW YORK STATE BOARD OF EQUALIZATION AND ASSESSMENTS.

To be completed by the Executive Budget Office

1589

2013 INTERGOVENMENTAL RELATIONS
MEMORANDUM OF SUPPORT

TITLE OF BILL: Delegating to the County Comptroller of the County of Suffolk, New York, the powers to authorize the issuance of and to sell not exceeding $105,000,000 Tax Anticipation Notes of said County in anticipation of the collection of taxes levied for County purposes or returned to the County for Collection for the fiscal years commencing January 1, 2011, 2012, 2013 and 2014 and providing for other matters in connection therewith.

PURPOSE OR GENERAL IDEA OF BILL: A request for enabling local legislation to approve issuing Tax Anticipation Notes of the County for the upcoming fiscal year to meet cash flow needs.

SUMMARY OF SPECIFIC PROVISIONS: To issue tax anticipation notes for cash flow purposes to cover cash flow needs for fiscal 2014. The current 2014 cash flow anticipates revenue of $100,000,000 in such tax anticipation notes. The resolution has been written to provide sufficient latitude in principal and final sizing will be based upon actual cash flow projection formulas.

JUSTIFICATION: Standard annual request for enabling local legislation to approve issuing Delinquent Tax Anticipation Notes of the County as provided within the most current 2014 cash flow.

FISCAL IMPLICATIONS: The notes will be issued prior to December 31, 2014 for a term of approximately one year and will impact debt service in the 2015 operating budget. Estimated gross interest cost for the maturing note is estimated to be $2,000,000 ($100,000,000 X 2.00% gross coupon for 12 months). It is anticipated that a reasonable premium will be bid by the underwriters and that the net interest cost may be approximately 1.00%. Interest rate estimates are based on current market rates and are subject to change.

COUNTY OF SUFFOLK

1589

OFFICE OF THE COUNTY COMPTROLLER

JOSEPH SAWICKI, JR.
Comptroller

May 19, 2014

HAND DELIVERED

Mr. Jon Schneider
Deputy County Executive
H. Lee Dennison Office Building – 12th Floor
100 Veterans Memorial Highway
Hauppauge, New York 11788

Dear Jon:

SUBJECT: TAX ANTICIPATION NOTE RESOLUTION – $105,000,000

Attached please find the above referenced resolution and fiscal impact statement. Same has been circulated to all parties via e-mail (CE RESO REVIEW) and hand delivered this date so the resolution may be laid on the table on June 17, 2014 and eligible for consideration for adoption on July 29, 2014. Titles of the electronic files are *Reso-A&C-2014 DTAN, Backup-A&C-2014 DTAN-175a, Backup-A&C-2014 DTAN-175b and Backup-A&C-2014 DTAN MOS..*

The resolution authorizes me to issue tax anticipation notes to fulfill our operating cash flow requirements. Details relative to the issue are recited in the fiscal impact statement that is attached herewith. Bond Counsel has reviewed and approved the format of the resolution for presentation to the County Legislature.

Sincerely,

Joseph Sawicki, Jr.
County Comptroller

cc: Dennis M. Cohen, Chief Deputy County Executive
Lisa Santeramo, Assistant Deputy County Executive
Thomas Vaughn, Director of Intragovernmental Relations
Christina Capobianco, Chief Deputy Comptroller
Connie Corso, Budget Director
Geraldine Olson, Municipal Finance Administrator

Intro Res. No. 1590-14 Laid on Table 6/17/14
Introduced by Presiding Officer on the Request of the County Executive

RESOLUTION NO. TO READJUST, COMPROMISE, AND GRANT REFUNDS AND CHARGEBACKS ON CORRECTION OR ERRORS/COUNTY TREASURER BY: COUNTY LEGISLATURE #410

WHEREAS, the County Legislature of the County of Suffolk may cancel assessments and grant refunds of taxes, in the case of erroneous or improper assessments, pursuant to the provisions of the Real Property Tax Law and the Suffolk County Tax Act, and

WHEREAS, the properties represented by the item numbers or tax map numbers indicated below have been erroneously or improperly assessed as appears from the certificates of Assessors of the respective towns in which said properties are situated as described below and the procedures as provided in the Real Property Tax Law have been fully complied with, now, therefore, be it

RESOLVED, that the taxes for the properties represented by the item numbers or tax map numbers as shown for the year or years specified be readjusted or refunded in full or in part in the amount set opposite each such parcel as hereinafter indicated, and

BE IT FURTHER RESOLVED that the amount of such adjustment or refund be charged back to the respective town as provided by law.

Description	Year	Original Tax	Corrected Tax	Chargeback or Refund, if paid
ISLIP:				
0500-366.00-02.00-003.003	**2013/14**	**$10,184.00**	**0.00**	**$10,184.00**
0500-114.00-03.00-081.000	**2013/14**	**$ 5,183.46**	**0.00**	**$ 5,183.46**
0500-135.00-01.00-055.000	**2013/14**	**$ 5,999.62**	**0.00**	**$ 5,999.62**

Dated:

Approved By:

Suffolk County Executive

Date of Approval:

STATEMENT OF FINANCIAL IMPACT
OF PROPOSED SUFFOLK COUNTY LEGISLATION

1590

1. Type of Legislation
   ResolutionXXX Local Law Charter Law

2. Title of Proposed Legislation
   To readjust, compromise and grant refunds and charge backs on Correction of Errors/County Treasurer By: County Treasurer

3. Purpose of Proposed Legislation
   To cancel or adjust taxes and make refunds and charge backs due to erroneous or improper assessments.

4. Will the Proposed Legislation Have a Fiscal Impact? **YES XXX** NO

5. If the answer to item 5 is "yes," on what will it impact? (Circle appropriate category)

County	**Town**	Economic Impact
Village	School District	Other (Specify):
Library District	Fire District	

6. If the answer to item 5 is "yes," Provide Detailed Explanation of Impact
   In the case of refunds, the County will initially refund the amount of the incorrect tax. Approximately 81% of the refunded amount will be charged back to the Town to be added to the subsequent year's tax warrant. The remainder will be a County charge. If the original tax is unpaid, the same procedure would apply, however, no County monies would be refunded and it will be charged back to the Town within twelve to eighteen months.

7. Total Financial Cost of Funding over 5 Years on Each Affected Political or Other Subdivision.
   Unknown

8. Proposed Source of Funding
   To be refunded from the County General Fund

9. Timing of Impact
   Variable

10. Typed Name & Title of Preparer	11. Signature of Preparer	12. Date
Angie M. Carpenter County Treasurer	Angie M. Carpenter	5/27/14

1591

Intro. Res. No. - 2014 Laid on the Table 6/17/14

Introduced by Presiding Officer on request of the County Executive

RESOLUTION NO. - 2014, APPROPRIATING FUNDS IN CONNECTION WITH CONSTRUCTION OF SIDEWALKS ON VARIOUS COUNTY ROADS (CP 5497)

WHEREAS, the Commissioner of Public Works has requested funds for construction in connection with Construction of Sidewalks on Various County Roads; and

WHEREAS, there are sufficient funds within the 2014 Capital Budget and Program to cover the cost of said request; and

WHEREAS, Resolution No. 471-1994 and as amended by Resolution No. 461-2006 has established a priority ranking system as the basis for funding Capital Projects such as this project; and

WHEREAS, the County Legislature, by resolution of even date herewith, has authorized the issuance of $500,000 in Suffolk County Serial Bonds; now, therefore, be it

1st **RESOLVED**, that this Legislature hereby determines that construction and/or restoration of sidewalks on various County roads constitutes a Type II action pursuant to the provisions of Title 6 NYCRR Part 617.5(C), (1), (2), (20) and (27) since the action involves a legislative decision concerning routine maintenance or repair involving no substantial changes in existing structure and/or replacement, rehabilitation or reconstruction of a structure, in kind, on the same site; and be it further

2nd **RESOLVED**, that it is hereby determined that this project, with a priority ranking of forty nine (49) is eligible for approval in accordance with the provisions of Resolution No. 471-1994 as revised by Resolution No. 461-2006; and be it further

3rd **RESOLVED**, that the County Department of Public Works is hereby authorized, empowered and directed to take such action as may be necessary to complete Construction of Sidewalks on Various County Roads, pursuant to Section C8-2 (A) of the Suffolk County Charter; and be it further

4th **RESOLVED**, that the proceeds of $500,000 in Suffolk County Serial Bonds be and they are hereby appropriated as follows:

Project No.	J.C.	Project Title	Amount
525-CAP-5497.335 (Fund 001-Debt Service)	50	Construction of Sidewalks on Various County Roads	$500,000

DATED:

APPROVED BY:

_____

County Executive of Suffolk County

Date:

1591

STATEMENT OF FINANCIAL IMPACT
OF PROPOSED SUFFOLK COUNTY LEGISLATION

1. Type of Legislation

Resolution ___X___ Local Law _____ Charter Law _____

2. Title of Proposed Legislation

RESOLUTION NO. - 2014, APPROPRIATING FUNDS IN CONNECTION WITH CONSTRUCTION OF SIDEWALKS ON VARIOUS COUNTY ROADS (CP 5497)

3. Purpose of Proposed Legislation

See above.

4. Will the Proposed Legislation Have a Fiscal Impact? **Yes** __X__ **No** _____

5. If the answer to item 4 is "yes", on what will it impact? (circle appropriate category)

County **Town** **Economic Impact**

Village **School District** **Other (Specify):**

Library District **Fire District**

6. If the answer to item 5 is "yes", Provide Detailed Explanation of Impact

SERIAL BONDS WILL BE ISSUED TO FINANCE THIS PROJECT. PRINCIPAL AND INTEREST COSTS WILL BE INCURRED OVER THE LIFE OF THE BONDS.

7. Total Financial Cost of Funding over 5 Years on Each Affected Political or Other Subdivision.

SEE ATTACHED DEBT SCHEDULE

8. Proposed Source of Funding

SERIAL BONDS

9. Timing of Impact

IT IS ANTICIPATED THAT BONDS WILL BE ISSUED FALL OF 2014 AND DEBT SERVICE WILL COMMENCE FALL 2015. THERE IS NO FISCAL IMPACT IN 2014.

10. Typed Name & Title of Preparer	11. Signature of Preparer	12. Date
Nicholas Paglia Asst Executive Analyst		June 10, 2014

SCIN FORM 175b (10/95)

FINANCIAL IMPACT
2015 PROPERTY TAX LEVY*
COST TO THE AVERAGE TAXPAYER

1591

GENERAL FUND

	2014 PROPERTY TAX LEVY	2015* COST TO AVG TAXPAYER	2014 AV TAX RATE PER $100	2014 FEV TAX RATE PER $1000
TOTAL	**$60,627**	**$0.12**		$0.000

POLICE DISTRICT AND DISTRICT COURT

	2014 PROPERTY TAX LEVY	2015* COST TO AVG TAXPAYER	2014 AV TAX RATE PER $100	2014 FEV TAX RATE PER $1000
TOTAL	**$0**	**$0.00**		$0.000

COMBINED

	2014 PROPERTY TAX LEVY	2015* COST TO AVG TAXPAYER	2014 AV TAX RATE PER $100	2014 FEV TAX RATE PER $1000
TOTAL	**$60,627**	**$0.12**		$0.000

**** The Estimated 2015 Cost to Average Taxpayer is based upon the 2014 property tax levy and is provided for informational purposes only.***

NOTES:
1) SOURCE FOR NUMBER OF FAMILY PARCELS AND CORRESPONDING ASSESSED VALUATION: SUFFOLK COUNTY REAL PROPERTY, 2013.
2) SOURCE FOR TOTAL TAXABLE ASSESSED VALUATION FOR COUNTY PURPOSES: SCHEDULE A, REPORT OF ASSESSED VALUATION FOR 2013-2014.
3) SOURCE FOR EQUALIZATION RATES: 2013 COUNTY EQUALIZATION RATES ESTABLISHED BY THE NEW YORK STATE BOARD OF EQUALIZATION AND ASSESSMENTS.

To be completed by the Executive Budget Office

Suffolk County

General Obligation Serial Bonds
Level Debt

1591

Term of Bonds	10
Amount to Bond:	$500,000

Date	Coupon	Principal	Interest	Total Debt Service	Fiscal Debt Service
11/1/2015					
11/1/2016	3.000%	$42,293.47	$18,333.33	$60,626.81	$60,626.81
			$8,391.29	$8,391.29	
11/1/2017	3.000%	$43,844.23	$8,391.29	$52,235.52	$60,626.81
			$7,587.48	$7,587.48	
11/1/2018	3.000%	$45,451.86	$7,587.48	$53,039.33	$60,626.81
			$6,754.19	$6,754.19	
11/1/2019	4.000%	$47,118.42	$6,754.19	$53,872.61	$60,626.81
			$5,890.35	$5,890.35	
11/1/2020	4.000%	$48,846.10	$5,890.35	$54,736.45	$60,626.81
			$4,994.84	$4,994.84	
11/1/2021	4.000%	$50,637.12	$4,994.84	$55,631.96	$60,626.81
			$4,066.49	$4,066.49	
11/1/2022	4.000%	$52,493.82	$4,066.49	$56,560.31	$60,626.81
			$3,104.11	$3,104.11	
11/1/2023	4.000%	$54,418.59	$3,104.11	$57,522.70	$60,626.81
			$2,106.43	$2,106.43	
11/1/2024	4.000%	$56,413.94	$2,106.43	$58,520.37	$60,626.81
			$1,072.18	$1,072.18	
11/1/2025	4.000%	$58,482.45	$1,072.18	$59,554.63	$60,626.81
11/1/2026		$500,000.00	$106,268.06	$606,268.06	$606,268.06
11/1/2027					
11/1/2028					
11/1/2029					
11/1/2030					
11/1/2031					
11/1/2032					
11/1/2033					

1591

2014 INTERGOVERNMENTAL RELATIONS
MEMORANDUM OF SUPPORT

TITLE OF BILL: Appropriating funds in connection with Installation of Sidewalks on Various County Roads (CP 5497)

PURPOSE OR GENERAL IDEA OF BILL: This funding will provide for construction funding to repair/replace or install sidewalk along County roads. Improvements include repairing and/or replacement of sections of sidewalk, or installation of sidewalk where there is none existing and may include the removal of trees and spot drainage modifications. Slope grading and seeding may also be required.

SUMMARY OF SPECIFIC PROVISIONS: This is a current Capital Budget project, there are no offsets needed.

JUSTIFICATION: These funds enable Suffolk County Department of Public Works to continue repair/replacement and installation of sidewalks along County roads.

FISCAL IMPLICATIONS: Bonds will be issued to finance this project and principal and interest costs will be incurred over the life of the Bonds.

COUNTY OF SUFFOLK

1591

STEVEN BELLONE
SUFFOLK COUNTY EXECUTIVE

DEPARTMENT OF PUBLIC WORKS

GILBERT ANDERSON, P.E.
COMMISSIONER

PHILIP A. BERDOLT
DEPUTY COMMISSIONER

DARNELL TYSON, P.E.
DEPUTY COMMISSIONER

MEMORANDUM

TO: Jon Schneider, Deputy County Executive

FROM: Gilbert Anderson, P.E. Commissioner

DATE: May 22, 2014

RE: Appropriating Funds in Connection with Construction of Sidewalks on Various County Roads (CP 5497)

Attached is a draft resolution to appropriate the sum of $500,000 for construction in connection with the above referenced project. There are sufficient funds included in the 2014 Capital Budget and Program for this project.

This funding provides for the installation and restoration of sidewalks on County roads to advance a safe environment for pedestrian traffic. Improvements include concrete curb and sidewalk, as well as possible spot drainage modifications.

Potential locations for sidewalk installation and/or repair are CR 63, Old East Moriches-Riverhead Road from the vicinity of the traffic circle to the vicinity of Peg Lane (Riverhead/Southampton); CR 80, Montauk Highway from the vicinity of Cedar Street to the vicinity of Old Neck Road (Brookhaven) and CR 46, William Floyd Parkway in the vicinity of NYS Route 27, Sunrise Highway (Brookhaven). ***It may be necessary to add and/or substitute other locations due to seasonal limitations, changes in priorities or other requirements to be determined by this Department.***

The Suffolk County Council on Environmental Quality has reviewed projects of this nature and have determined that construction and/or restoration of sidewalks on various County roads constitutes a Type II action pursuant to the provisions of Title 6 NYCRR Part 617.5(c) (1), (2), (20) and (27) and the Suffolk County Legislature has concurred with these findings.

An e-mail version of this resolution was sent to CE RESO REVIEW saved under the title "Reso-DPW-CP5497(Sidewalks).doc".

GA/WH/td
attach.
cc: Dennis M. Cohen, Chief Deputy County Executive
Lisa Santeramo, Assistant Deputy County Executive
Tom Vaughn, Director of Intragovernmental Relations
William Hillman, P.E., Chief Engineer
Charles Jaquin, Acting Head of Finance Division

1592

Intro. Res. No. - 2014 Laid on the Table 6/17/14

Introduced by Presiding Officer on request of the County Executive

RESOLUTION NO. - 2014, APPROPRIATING FUNDS IN CONNECTION WITH DREDGING OF COUNTY WATERS AT VARIOUS LOCATIONS (CP 5200)

WHEREAS, the Commissioner of Public Works has requested funds engineering, site improvements and equipment in connection with the dredging of County waters at various locations; and

WHEREAS, there are sufficient funds within the 2014 Capital Budget and Program to cover the cost of said request; and

WHEREAS, Resolution No. 471-1994 and as amended by Resolution No. 461-2006 has established a priority ranking system as the basis for funding Capital Projects such as this project; and

WHEREAS, as the New York State Department of Environmental Conservation is the SEQRA lead agency for all dredging projects, this project is not reviewed by the Suffolk County Council on Environmental Quality; and

WHEREAS, the County Legislature, by resolution of even date herewith, has authorized the issuance of $1,451,500 in Suffolk County Serial Bonds; now, therefore, be it

1st **RESOLVED**, that it is hereby determined that this project, with a priority ranking of fifty seven (57) is eligible for approval in accordance with the provisions of Resolution No. 471-1994 as revised by Resolution No. 461-2006; and be it further

2nd **RESOLVED**, that the County Department of Public Works is hereby authorized, empowered and directed to take such action as may be necessary to complete Dredging of County Waters at Various Locations, pursuant to Section C8-2 (F) of the Suffolk County Charter; and be it further

3rd **RESOLVED**, that the proceeds of $1,451,500 in Suffolk County Serial Bonds be and they are hereby appropriated as follows:

Project No.	J.C.	Project Title	Amount
525-CAP-5200.121 (Fund 001-Debt Service)	50	Dredging of County Waters at Various Locations	$35,000

Project No.	J.C.	Project Title	Amount
525-CAP-5200.451 (Fund 001-Debt Service)	50	Dredging of County Waters at Various Locations	$1,216,500

Project No.	J.C.	Project Title	Amount
525-CAP-5200.513 (Fund 001-Debt Service)	50	Dredging of County Waters at Various Locations	$200,000

DATED:

APPROVED BY:

_____

County Executive of Suffolk County

Date:

1592

STATEMENT OF FINANCIAL IMPACT
OF PROPOSED SUFFOLK COUNTY LEGISLATION

1. Type of Legislation

Resolution ___X___ Local Law _____ Charter Law _____

2. Title of Proposed Legislation

RESOLUTION NO. - 2014, APPROPRIATING FUNDS IN CONNECTION WITH DREDGING OF COUNTY WATERS AT VARIOUS LOCATIONS (CP 5200)

3. Purpose of Proposed Legislation

See above.

4. Will the Proposed Legislation Have a Fiscal Impact? **Yes** __X__ **No** ____

5. If the answer to item 4 is "yes", on what will it impact? (circle appropriate category)

County **Town** **Economic Impact**

Village **School District** **Other (Specify):**

Library District **Fire District**

6. If the answer to item 5 is "yes", Provide Detailed Explanation of Impact

SERIAL BONDS WILL BE ISSUED TO FINANCE THIS PROJECT. PRINCIPAL AND INTEREST COSTS WILL BE INCURRED OVER THE LIFE OF THE BONDS.

7. Total Financial Cost of Funding over 5 Years on Each Affected Political or Other Subdivision.

SEE ATTACHED DEBT SCHEDULE

8. Proposed Source of Funding

SERIAL BONDS

9. Timing of Impact

IT IS ANTICIPATED THAT BONDS WILL BE ISSUED FALL OF 2014 AND DEBT SERVICE WILL COMMENCE FALL 2015. THERE IS NO FISCAL IMPACT IN 2014.

10. Typed Name & Title of Preparer	11. Signature of Preparer	12. Date
Nicholas Paglia Asst Executive Analyst		June 10, 2014

SCIN FORM 175b (10/95)

FINANCIAL IMPACT
2015 PROPERTY TAX LEVY*
COST TO THE AVERAGE TAXPAYER

1592

GENERAL FUND

	2014 PROPERTY TAX LEVY	2015* COST TO AVG TAXPAYER	2014 AV TAX RATE PER $100	2014 FEV TAX RATE PER $1000
TOTAL	$320,570	$0.62		$0.001

POLICE DISTRICT AND DISTRICT COURT

	2014 PROPERTY TAX LEVY	2015* COST TO AVG TAXPAYER	2014 AV TAX RATE PER $100	2014 FEV TAX RATE PER $1000
TOTAL	$0	$0.00		$0.000

COMBINED

	2014 PROPERTY TAX LEVY	2015* COST TO AVG TAXPAYER	2014 AV TAX RATE PER $100	2014 FEV TAX RATE PER $1000
TOTAL	$320,570	$0.62		$0.001

**** The Estimated 2015 Cost to Average Taxpayer is based upon the 2014 property tax levy and is provided for informational purposes only.***

NOTES:
1) SOURCE FOR NUMBER OF FAMILY PARCELS AND CORRESPONDING ASSESSED VALUATION: SUFFOLK COUNTY REAL PROPERTY, 2013.
2) SOURCE FOR TOTAL TAXABLE ASSESSED VALUATION FOR COUNTY PURPOSES: SCHEDULE A, REPORT OF ASSESSED VALUATION FOR 2013-2014.
3) SOURCE FOR EQUALIZATION RATES: 2013 COUNTY EQUALIZATION RATES ESTABLISHED BY THE NEW YORK STATE BOARD OF EQUALIZATION AND ASSESSMENTS.

To be completed by the Executive Budget Office

Suffolk County

General Obligation Serial Bonds
Level Debt

1592

Term of Bonds	5
Amount to Bond:	$1,451,500

Date	Coupon	Principal	Interest	Total Debt Service	Fiscal Debt Service
11/1/2015					
11/1/2016	3.000%	$271,219.30	$49,351.00	$320,570.30	$320,570.30
			$20,064.77	$20,064.77	
11/1/2017	3.000%	$280,440.75	$20,064.77	$300,505.52	$320,570.30
			$15,297.28	$15,297.28	
11/1/2018	3.000%	$289,975.74	$15,297.28	$305,273.02	$320,570.30
			$10,367.69	$10,367.69	
11/1/2019	4.000%	$299,834.91	$10,367.69	$310,202.60	$320,570.30
			$5,270.50	$5,270.50	
11/1/2020	4.000%	$310,029.30	$5,270.50	$315,299.80	$320,570.30
11/1/2021		$1,451,500.00	$151,351.48	$1,602,851.48	$1,602,851.48
11/1/2022					
11/1/2023					
11/1/2024					
11/1/2025					
11/1/2026					
11/1/2027					
11/1/2028					
11/1/2029					
11/1/2030					
11/1/2031					
11/1/2032					
11/1/2033					

1592

2014 INTERGOVERNMENTAL RELATIONS
MEMORANDUM OF SUPPORT

TITLE OF BILL: Appropriating funds in connection with Dredging of County Waters at Various Locations (CP 5200)

PURPOSE OR GENERAL IDEA OF BILL: This funding will provide for engineering, site improvements and rental equipment for the County's dredging program. Site improvement funding provides for the dredging of large-scale locations and equipment funding provides for the rental and contract dredging of smaller locations.

SUMMARY OF SPECIFIC PROVISIONS: This is a current Capital Budget project, there are no offsets needed.

JUSTIFICATION: These funds enable Suffolk County Department of Public Works to continue the County's dredging program.

FISCAL IMPLICATIONS: Bonds will be issued to finance this project and principal and interest costs will be incurred over the life of the Bonds.

COUNTY OF SUFFOLK

1592

STEVEN BELLONE
SUFFOLK COUNTY EXECUTIVE

DEPARTMENT OF PUBLIC WORKS

GILBERT ANDERSON, P.E.
COMMISSIONER

PHILIP A. BERDOLT
DEPUTY COMMISSIONER

DARNELL TYSON, P.E.
DEPUTY COMMISSIONER

MEMORANDUM

TO: Jon Schneider, Deputy County Executive

FROM: Gilbert Anderson, P.E. Commissioner

DATE: May 22, 2014

RE: Appropriating Funds in Connection with Dredging of County Waters (CP 5200)

Attached is a draft resolution to appropriate the sum of $35,000 for engineering, $1,216,500 for site improvements and $200,000 for equipment in connection with the above referenced project. There are sufficient funds included in the 2014 Capital Budget and Program for this project.

This funding is intended for engineering associated with the planning and design (including consultant services for application of environmental permits), site improvements for large-scale dredging projects, and equipment rental and services associated with dredging of smaller locations utilizing our dredging equipment requirements contract to support the County's dredge program. Locations anticipated to be dredged during the 2014-2015 dredge season include Napeague Harbor, Centerport Harbor (large-scale), Police Marina @ Timber Point, Hard Estate (Long Island Maritime Museum), Wampum Lagoon, Wagstaff Lagoon, Talulah Lagoon and Davison Lagoon (smaller locations).

It may be necessary to add and/or substitute other waterways due to environmental permits, changes in priorities or other requirements to be determined by this Department.

As the New York State Department of Environmental Conservation is SEQRA lead agency for all dredging projects, this project is not reviewed by the Suffolk County Council on Environmental Quality.

An e-mail version of this resolution was sent to CE RESO REVIEW saved under the title "Reso-DPW-CP5200(Dredging-Eng,Site,Equip).doc".

GA/WH/td
attach.
cc: Dennis M. Cohen, Chief Deputy County Executive
Lisa Santeramo, Assistant Deputy County Executive
Tom Vaughn, Director of Intragovernmental Relations
William Hillman, P.E., Chief Engineer
Charles Jaquin, Acting Head of Finance Division

335 YAPHANK AVENUE ■ YAPHANK, N.Y. 11980 ■ (631) 852-4010 FAX (631) 852-4150

1593

Intro. Res. No. - 2014 Laid on the Table 6/17/14

Introduced by Presiding Officer on request of the County Executive

RESOLUTION NO. - 2014, APPROPRIATING FUNDS IN CONNECTION WITH INSTALLATION OF GUIDE RAIL AND SAFETY UPGRADES AT VARIOUS LOCATIONS (CP 5180)

WHEREAS, the Commissioner of Public Works has requested funds for construction in connection with Installation of Guide Rail and Safety Upgrades at Various Locations; and

WHEREAS, there are sufficient funds within the 2014 Capital Budget and Program to cover the cost of said request; and

WHEREAS, Resolution No. 471-1994 and as amended by Resolution No. 461-2006 has established a priority ranking system as the basis for funding Capital Projects such as this project; and

WHEREAS, this Legislature reviewed projects of this nature under a previous version of implementing rules and regulations of SEQRA and determined, by Resolution 1174-1995 that the installation of guide rails and safety upgrading constitutes a Type II action; and

WHEREAS, the County Legislature, by resolution of even date herewith, has authorized the issuance of $250,000 in Suffolk County Serial Bonds; now, therefore, be it

1st **RESOLVED**, that this Legislature hereby determines that the installation of guide rails and safety upgrading constitutes a Type II action pursuant to the provision of Title 6 NYCRR Part 617.5(c) (16), (20) and (27) since the action involves a legislative decision concerning the installation of traffic control devices on existing streets, roads and highways; and be it further

2nd **RESOLVED**, that it is hereby determined that this project, with a priority ranking of fifty one (51) is eligible for approval in accordance with the provisions of Resolution No. 471-1994 as revised by Resolution No. 461-2006; and be it further

3rd **RESOLVED**, that the County Department of Public Works is hereby authorized, empowered and directed to take such action as may be necessary to complete Installation of Guide Rail and Safety Upgrades at Various Locations, pursuant to Section C8-2 (A) of the Suffolk County Charter; and be it further

4th **RESOLVED**, that the proceeds of $250,000 in Suffolk County Serial Bonds be and they are hereby appropriated as follows:

Project No.	J.C.	Project Title	Amount
525-CAP-5180.350 (Fund 001 – Debt Service)	50	Installation of Guide Rail and Safety Upgrades at Various Locations	$250,000

DATED:

APPROVED BY:

_____

County Executive of Suffolk County

Date:

STATEMENT OF FINANCIAL IMPACT
OF PROPOSED SUFFOLK COUNTY LEGISLATION

1593

1. Type of Legislation

Resolution ___X___ Local Law _____ Charter Law _____

2. Title of Proposed Legislation

RESOLUTION NO. - 2014, APPROPRIATING FUNDS IN CONNECTION WITH INSTALLATION OF GUIDE RAIL AND SAFETY UPGRADES AT VARIOUS LOCATIONS (CP 5180)

3. Purpose of Proposed Legislation

See above.

4. Will the Proposed Legislation Have a Fiscal Impact? **Yes** __X__ **No** _____

5. If the answer to item 4 is "yes", on what will it impact? (circle appropriate category)

County **Town** **Economic Impact**

Village **School District** **Other (Specify):**

Library District **Fire District**

6. If the answer to item 5 is "yes", Provide Detailed Explanation of Impact

SERIAL BONDS WILL BE ISSUED TO FINANCE THIS PROJECT. PRINCIPAL AND INTEREST COSTS WILL BE INCURRED OVER THE LIFE OF THE BONDS.

7. Total Financial Cost of Funding over 5 Years on Each Affected Political or Other Subdivision.

SEE ATTACHED DEBT SCHEDULE

8. Proposed Source of Funding

SERIAL BONDS

9. Timing of Impact

IT IS ANTICIPATED THAT BONDS WILL BE ISSUED FALL OF 2014 AND DEBT SERVICE WILL COMMENCE FALL 2015. THERE IS NO FISCAL IMPACT IN 2014.

10. Typed Name & Title of Preparer	11. Signature of Preparer	12. Date
Nicholas Paglia Asst Executive Analyst		June 10, 2014

SCIN FORM 175b (10/95)

FINANCIAL IMPACT
2015 PROPERTY TAX LEVY*
COST TO THE AVERAGE TAXPAYER

1593

GENERAL FUND

	2014 PROPERTY TAX LEVY	2015* COST TO AVG TAXPAYER	2014 AV TAX RATE PER $100	2014 FEV TAX RATE PER $1000
TOTAL	**$55,214**	**$0.11**		$0.000

POLICE DISTRICT AND DISTRICT COURT

	2014 PROPERTY TAX LEVY	2015* COST TO AVG TAXPAYER	2014 AV TAX RATE PER $100	2014 FEV TAX RATE PER $1000
TOTAL	**$0**	**$0.00**		$0.000

COMBINED

	2014 PROPERTY TAX LEVY	2015* COST TO AVG TAXPAYER	2014 AV TAX RATE PER $100	2014 FEV TAX RATE PER $1000
TOTAL	**$55,214**	**$0.11**		$0.000

**** The Estimated 2015 Cost to Average Taxpayer is based upon the 2014 property tax levy and is provided for informational purposes only.***

NOTES:
1) SOURCE FOR NUMBER OF FAMILY PARCELS AND CORRESPONDING ASSESSED VALUATION: SUFFOLK COUNTY REAL PROPERTY, 2013.
2) SOURCE FOR TOTAL TAXABLE ASSESSED VALUATION FOR COUNTY PURPOSES: SCHEDULE A, REPORT OF ASSESSED VALUATION FOR 2013-2014.
3) SOURCE FOR EQUALIZATION RATES: 2013 COUNTY EQUALIZATION RATES ESTABLISHED BY THE NEW YORK STATE BOARD OF EQUALIZATION AND ASSESSMENTS.

To be completed by the Executive Budget Office

Suffolk County

General Obligation Serial Bonds
Level Debt

1593

Term of Bonds	5
Amount to Bond:	$250,000

Date	Coupon	Principal	Interest	Total Debt Service	Fiscal Debt Service
11/1/2015					
11/1/2016	3.000%	$46,713.62	$8,500.00	$55,213.62	$55,213.62
			$3,455.87	$3,455.87	
11/1/2017	3.000%	$48,301.89	$3,455.87	$51,757.75	$55,213.62
			$2,634.74	$2,634.74	
11/1/2018	3.000%	$49,944.15	$2,634.74	$52,578.89	$55,213.62
			$1,785.69	$1,785.69	
11/1/2019	4.000%	$51,642.25	$1,785.69	$53,427.94	$55,213.62
			$907.77	$907.77	
11/1/2020	4.000%	$53,398.09	$907.77	$54,305.86	$55,213.62
11/1/2021		$250,000.00	$26,068.12	$276,068.12	$276,068.12
11/1/2022					
11/1/2023					
11/1/2024					
11/1/2025					
11/1/2026					
11/1/2027					
11/1/2028					
11/1/2029					
11/1/2030					
11/1/2031					
11/1/2032					
11/1/2033					

1593

2014 INTERGOVERNMENTAL RELATIONS
MEMORANDUM OF SUPPORT

TITLE OF BILL: Appropriating funds in connection with Installation of Guide Rail and Safety Upgrades at Various Locations (CP 5180)

PURPOSE OR GENERAL IDEA OF BILL: This funding will provide for construction funding to repair/maintain or replace guiderail along County roads. Improvements include repairing and/or replacement of sections of steel guiderail and may include the removal of trees or other fixed objects considered to be a safety concern. Slope grading and seeding may also be required.

SUMMARY OF SPECIFIC PROVISIONS: This is a current Capital Budget project, there are no offsets needed.

JUSTIFICATION: These funds enable Suffolk County Department of Public Works to continue the County's requirements contract for the repair and/or replacement of guiderail and safety upgrades along County roads.

FISCAL IMPLICATIONS: Bonds will be issued to finance this project and principal and interest costs will be incurred over the life of the Bonds.

COUNTY OF SUFFOLK

1593

STEVEN BELLONE
SUFFOLK COUNTY EXECUTIVE

DEPARTMENT OF PUBLIC WORKS

GILBERT ANDERSON, P.E.
COMMISSIONER

PHILIP A. BERDOLT
DEPUTY COMMISSIONER

DARNELL TYSON, P.E.
DEPUTY COMMISSIONER

MEMORANDUM

TO: Jon Schneider, Deputy County Executive

FROM: Gilbert Anderson, P.E. Commissioner

DATE: May 22, 2014

RE: Appropriating Funds in Connection with Installation of Guiderail and Safety Upgrades at Various Locations (CP 5180)

Attached is a draft resolution to appropriate the sum of $250,000 for construction in connection with the above referenced project. There are sufficient funds included in the 2014 Capital Budget and Program for this project.

This project consists of the installation of guide railing and other safety upgrading to conform to current State and Federal standards. Work includes repair to damaged guide rail, installation of guide rail, removal of unnecessary guide rail, slope grading and seeding, removal of trees and other fixed objects in hazardous locations.

Potential locations for guide rail repair/installation and/or safety upgrades are CR 101, Sills Road in the Vicinity of NYS Route 27, Sunrise Highway and Brookhaven Hospital (Brookhaven); CR 46, William Floyd Parkway at Moriches Middle Island Road (Brookhaven) and CR 97, Nicolls Road at NYS Route 27, Sunrise Highway (Islip). ***It may be necessary to add and/or substitute other locations due to seasonal limitations, changes in priorities or other requirements to be determined by this Department.***

The Suffolk County Council on Environmental Quality has reviewed projects of this nature under a previous version of the implementing rules and regulations of SEQRA and determined by Resolution 1174-1995 that the project constitutes a Type II action.

An e-mail version of this resolution was sent to CE RESO REVIEW saved under the title "Reso-DPW-CP5180(Guiderail).doc".

GA/WH/td
attach.
cc: Dennis M. Cohen, Chief Deputy County Executive
Lisa Santeramo, Assistant Deputy County Executive
Tom Vaughn, Director of Intragovernmental Relations
William Hillman, P.E., Chief Engineer
Charles Jaquin, Acting Head of Finance Division

1594

Intro. Res. No. -2014 Laid on Table 6/17/14

Introduced by Presiding Officer on request of the County Executive

RESOLUTION NO. -2014, AUTHORIZING USE OF THE LONG ISLAND MARITIME MUSEUM BY THE ROTARY CLUB OF SAYVILLE FOR ANNUAL BEEFSTEAK FUNDRAISER

WHEREAS, Rotary Club of Sayville is a 501(c)(4) organization operating as a local chapter of Rotary International, having its principal place of business at 1560 Sherman Avenue, Evanston, Illinois; and

WHEREAS, the Rotary Club of Sayville would like to use the Long Island Maritime Museum in the County Park in West Sayville for the purpose of hosting their Annual Beefsteak Fundraiser to raise money for the organization; and

WHEREAS, the fundraiser will be held on the grounds of the Long Island Maritime Museum on Thursday, August 7, 2014; and

WHEREAS, the Long Island Maritime Museum is authorized to charge a reasonable fee for the utilization of its facilities under its license agreement with the County; and

WHEREAS, a Certificate of Insurance with accompanying declaration page naming Suffolk County as an additional insured will be provided by Rotary International; now therefore, be it

1st RESOLVED, that this Legislature, being the lead agency under the State Environmental Quality Review Act ("SEQRA"), New York Environmental Conservation Law, Article 8, hereby finds and determines that this resolution constitutes a Type II action, pursuant to Volume 6 of New York Code of Rules and Regulations ("NYCRR") § 617.5 (C)(15), (20) and (27), in that the resolution concerns minor temporary uses of land having negligible or no permanent impact on the environment, routine, or continuing agency administration and management, not including new programs or major reordering of priorities, and adoption of a local legislative decision in connection with the same, and since this is a Type II action, the County Legislature has no further responsibilities under SEQRA, and be it further

2nd RESOLVED, that the use of Long Island Maritime Museum by the Rotary Club of Sayville for the purpose of hosting a fundraiser on Thursday, August 7, 2014, is hereby approved pursuant to Section 215(1) of the NEW YORK STATE COUNTY LAW, subject to the receipt of a Certificate of Insurance with accompanying declaration page by the County of Suffolk from Rotary International and the payment of the One Thousand Five Hundred Dollar ($1500.00) event fee to the Long Island Maritime Museum, and the issuance of a permit by the Commissioner of Parks, Recreation and Conservation pursuant to section 378-7B(c) of the Suffolk County Code, and subject to such additional terms and conditions as may be required by the Risk Management and Benefits Division; and be it further

3rd RESOLVED, that the Commissioner of the Suffolk County Department of Parks, Recreation and Conservation is hereby authorized, empowered and directed, pursuant to Section 28-4(A) of the SUFFOLK COUNTY CHARTER, to take such measures as shall be necessary and appropriate to facilitate the hosting of the fundraiser at the Long Island Maritime Museum by the Rotary Club of Sayville.

DATED:

APPROVED BY:

_____

Date of Approval:

STATEMENT OF FINANCIAL IMPACT
OF PROPOSED SUFFOLK COUNTY LEGISLATION

1. Type of Legislation

Resolution X Local Law _____ Charter Law ____ 1594

2. Title of Proposed Legislation

AUTHORIZING USE OF THE LONG ISLAND MARITIME MUSEUM BY THE ROTARY CLUB OF SAYVILLE FOR ANNUAL BEEFSTEAK FUNDRAISER

3. Purpose of Proposed Legislation

Authorize use of County Parkland for fundraising event.

4. Will the Proposed Legislation Have a Fiscal Impact? Yes ____ No __X___

Fee is paid directly to Long Island Maritime Museum under the terms of its license agreement with County.

5. If the answer to item 4 is "yes", on what will it impact? (circle appropriate category)

County	Town	Economic Impact
Village	School District	Other (Specify):
Library District	Fire District	

6. If the answer to item 5 is "yes", Provide Detailed Explanation of Impact

N/A

7. Total Financial Cost of Funding over 5 Years on Each Affected Political or Other Subdivision.

N/A

8. Proposed Source of Funding

N/A

9. Timing Impact

N/A

10. Typed Name & Title of Preparer	11. Signature of Preparer	12. Date
Danielle L. Tings Sr. Account Clerk Typist Dept. of Parks, Recreation &Conservation		05/16/2014

SCIN FORM 175b (10/95) Page 1 of 1

Debra Kolyer
Principal Financial Analyst 6/6/14

FINANCIAL IMPACT
2014 PROPERTY TAX LEVY
COST TO THE AVERAGE TAXPAYER

1594

GENERAL FUND

	2014 PROPERTY TAX LEVY	2014 COST TO AVG TAXPAYER	2014 FEV TAX RATE PER $1000
TOTAL		$0.00	$0.000

POLICE DISTRICT AND DISTRICT COURT

	2014 PROPERTY TAX LEVY	2014 COST TO AVG TAXPAYER	2014 FEV TAX RATE PER $1000
TOTAL		$0.00	$0.000

COMBINED

	2014 PROPERTY TAX LEVY	2014 COST TO AVG TAXPAYER	2014 FEV TAX RATE PER $1000
TOTAL		$0.00	$0.000

NOTES:
1) SOURCE FOR NUMBER OF FAMILY PARCELS AND CORRESPONDING ASSESSED VALUATION: SUFFOLK COUNTY REAL PROPERTY, SEPTEMBER 2012.
2) SOURCE FOR TOTAL TAXABLE ASSESSED VALUATION FOR COUNTY PURPOSES: SCHEDULE A, REPORT OF ASSESSED VALUATION FOR 2012-2013.
3) SOURCE FOR EQUALIZATION RATES: TENTATIVE 2012 COUNTY EQUALIZATION RATES ESTABLISHED BY THE NEW YORK STATE BOARD OF EQUALIZATION AND ASSESSMENTS.

To be completed by the Executive Budget Office

COUNTY OF SUFFOLK

1594

STEVEN BELLONE
SUFFOLK COUNTY EXECUTIVE

DEPARTMENT OF
PARKS, RECREATION AND CONSERVATION

GREG DAWSON
COMMISSIONER

2014 INTERGOVERNMENTAL RELATIONS MEMORANDUM OF SUPPORT

TITLE OF BILL: An act to authorize the use of the Long Island Maritime Museum by the Rotary Club of Sayville for their Annual Beefsteak Fundraiser.

PURPOSE OR GENERAL IDEA OF THE BILL: The Rotary Club of Sayville would like to hold its Annual Beefsteak Fundraiser at the Long Island Maritime Museum in West Sayville.

SUMMARY OF SPECIFIC PROVISIONS: This legislation authorizes the use of the Long Island Maritime Museum by the Rotary Club of Sayville for the purpose of hosting a fundraiser on Thursday, August 7, 2014, subject to receipt of a Certificate of Insurance and accompanying declaration page by the County of Suffolk from the Rotary Club of Sayville, and the payment of One Thousand Five Hundred Dollars ($1500.00) event fee to the Long Island Maritime Museum, and subject to such additional terms and conditions as may be required by the Risk Management and Benefits Division in the County Department of Law. The Foundation anticipates approximately 250 people in attendance.

JUSTIFICATION: Sayville Rotary is dedicated to supporting the mission of Rotary International by creating a fellowship of local business and professional people who are committed to improving the Greater Sayville community and the world in which we live. The Sayville Club's largest fundraiser has been the annual Beefsteak which has been held since 1952. The event takes place on the grounds of the Long Island Maritime Museum during the month of August. The event brings thousands of dollars to the club's treasury which in turn is used to fund its many good works in the community and around the world. This event will generate One Thousand Five Hundred Dollars ($1500.00) in revenue for the Long Island Maritime Museum. The Long Island Maritime Museum is a contracted vendor with the County of Suffolk who maintains the historic facility also known as the Long Island Maritime Museum with monies generated from events.

FISCAL IMPLICATIONS: None

MONTAUK HIGHWAY – P.O. BOX 144 WEST SAYVILLE, NEW YORK 11796-0144 (631) 854-4949 FAX: (631) 854-4977

1594

LONG ISLAND MARITIME MUSEUM
APPLICATION FOR USE OF FACILITIES

APPLICANT'S NAME Sayville Rotary Club

ORGANIZATION NAME (if applicable) Rotary of Sayville

ADDRESS P.O. Box 34, Sayville NY 11782

CONTACT NAME Pamela Greene

PHONE NUMBER 516 639 5342 **E-Mail** pamgreene27@gmail.com

REQUEST USE OF (CHECK ALL THAT APPLY)

✓ GREAT LAWN (Up to 250 people) $1,500.00
____ DOCK FOR PICTURES (1 hour) ..... $ 150.00
____ DOCK FOR CEREMONY ..... $ 500.00
____ GAZEBO (1) ..... $ 350.00
____ STAFF FEE FOR EVENTS ..... $ 25.00 per hour
____ EVENTS EXCEEDING 5 HOURS ..... $250.00 per hour

TYPE OF EVENT Fundraising Beefsteak (Please be specific)

Will Food/Beverages be provided? **YES** ✓ **NO** ____

Is this event open to the general public? **YES** ✓ **NO** ____

If this event is open to the public *and* food/beverages are being provided, the *Suffolk County Department of Health Services Organizer's Application and Permit for Temporary Event* must be completed. All food vendors must complete the *Vendors Temporary Food Service Application and Permit.*

Event Date Requested August 7th (Rain and alternate dates are not accepted)

Set-Up Time 2:00PM Start Time 4:00PM Departure Time 10:00PM

Estimated Attendance +/- 250

Is event being catered? **YES** NW **NO** ✓ Name of Caterer ____

Will alcoholic beverages be provided? **YES** ✓ **NO** ____
(If **YES,** the Hold Harmless Agreement needs to be signed, notarized and returned to the Museum.)

Will alcoholic beverages be **sold? YES** ____ **NO** ✓ (If **YES,** a Special Event Permit must be filed with the NYS Liquor Authority to obtain a temporary liquor license).

Is this event a fundraiser? **YES** ✓ **NO** _____
(If **YES**, please see page 5.)

1594

Equipment and Supply Rentals Requested 1594

____

____

____

____

Vendors: **YES**__ **NO** ____ List all______________________________

____

____

____

Names of vendors (amusement, entertainment, food, etc.) at event must be listed above. Attach separate list if necessary. Insurance is required for all vendors. Please see the *2012 Insurance Requirements.*

I acknowledge that I have read and reviewed the application, instructions and all attachments.

[signature]	James M. Rosica	3/27/14
Applicant Signature	Please Print	Date

Sayville Rotary President

* *

OFFICE USE ONLY

SCHEDULE OF PAYMENTS AND DEPOSITS

Deposit Amount ________ Date Received ________
Balance Amount ________ Balance Received ________

Total Amount Due $ ________

ALL CHECKS ARE TO BE MADE PAYABLE TO: **LONG ISLAND MARITIME MUSEUM**

MAIL TO: LONG ISLAND MARITIME MUSEUM
P.O. BOX 184
WEST SAYVILLE, NY 11796

______________________________ ______________________________
Maritime Museum Staff Approval Date Parks Department Staff Approval Date

FUNDRAISERS

1594

At least five (5) months prior to your event, the name and nature, date and type of your fundraiser must be submitted in the form of a letter on your group's letterhead. Please be specific about any vendors you intend on using (food, craft, rentals, music, etc.) and what their names are as well as the activities you will be having. Date and type of fundraiser must be approved by the Museum Director. Fundraisers cannot be political in nature. The *Long Island Maritime Museum Application for use of Facilities* must be submitted in addition to this letter.

If the event meets the Director's approval, a resolution will be drafted for approval at the next meeting of the Board of Trustees. Upon approval by the Museum's Board of Trustees, the Museum Director will sign the facility rental application and attach the accompanying resolution for submission to Suffolk County Parks.

Please note that no application will be submitted to Suffolk County Parks until all components are given to the Long Island Maritime Museum. This includes but is not limited to insurance, deposit, special event permit, etc. All paperwork must be submitted directly to the Museum at least three (3) months prior to your event.

SUFFOLK COUNTY DEPARTMENT OF PARKS 1594

THE "HOLD HARMLESS" AGREEMENT BELOW MUST BE SIGNED AND NOTARIZED TO REQUEST PERMISSION TO CONSUME ALCOHOLIC BEVERAGES IN GROUP PICNIC AREAS ONLY.

HOLD HARMLESS AGREEMENT

THE APPLICANT/ORGANIZATION AGREES TO INDEMNIFY AND SAVE HARMLESS THE COUNTY OF SUFFOLK, ITS OFFICIALS, EMPLOYEES AND AGENTS FROM SUITS, ACTION, DAMAGES AND COST OF EVERY NATURE AND DESCRIPTION RESULTING FROM THE ACTIONS OF THE APPLICANT/ORGANIZATION.

THE APPLICANT/ORGANIZATION AGREES TO INDEMNIFY AND SAVE HARMLESS THE COUNTY OF SUFFOLK FROM ANY LIABILITY OR ACTION ARISING FROM ANY PROPERTY OWNED BY OR IN THE CARE, CUSTODY AND CONTROL OF THE APPLICANT.

4/11/14
DATE

Pamela Greene
PRINCIPAL OR AUTHORIZED REPRESENTATIVE
(APPLICANT/ORGANIZATION)

Bayville Rotary Club
GROUP/ORGANIZATION NAME

NOTARY

DATE April 11, 2014

MICHAEL D. DAWIDZIAK
Notary Public, State of New York
No. 01DA6077046
Qualified in Suffolk County
Commission Expires July 1, 20 14

COUNTY OF SUFFOLK

1594

STEVEN BELLONE
SUFFOLK COUNTY EXECUTIVE

DEPARTMENT OF
PARKS, RECREATION AND CONSERVATION

GREG DAWSON
COMMISSIONER

TO: JON SCHNEIDER, Deputy County Executive

FROM: GREG DAWSON, Commissioner

CC: DENNIS M. COHEN, Chief Deputy County Executive
LISA SANTERAMO, Assistant Deputy County Executive
TOM VAUGHN, Director of Intragovernmental Relations

DATE: May 16, 2014

RE: INTRODUCTORY RESOLUTION AUTHORIZING USE OF THE LONG ISLAND MARITIME MUSEUM BY THE ROTARY CLUB OF SAYVILLE FOR ANNUAL BEEFSTEAK FUNDRAISER

Enclosed please find a draft resolution and supporting documentation relative to the above-captioned. An e-mail version of this resolution was sent to CE RESO REVIEW under the file name "RESO-PKS-Rotary Club of Sayville Fundraising Event at LIMM.doc."

Should you require anything further, please contact my office at 4-4984.

Enclosures

MONTAUK HIGHWAY – P.O. BOX 144 WEST SAYVILLE, NEW YORK 11796-0144 (631) 854-4949 FAX: (631) 854-4977

SUFFOLK COUNTY PARKS

Introductory Resolution No. 1595-14 Laid on Table 6/17/14

Introduced by Presiding Officer on request of the County Executive

RESOLUTION NO. AUTHORIZING THE SALE, PURSUANT TO LOCAL LAW NO. 16-1976, OF REAL PROPERTY ACQUIRED UNDER SECTION 46 OF THE SUFFOLK COUNTY TAX ACT
JOHN DIFILIPPO, AS TO A 50% INTEREST AND ARTHUR M. SARTORAS, AS TO A 50% INTEREST
(SCTM NO. 0800-125.00-02.00-005.000)

WHEREAS, the COUNTY OF SUFFOLK acquired the following described parcel:

ALL, that certain plot, piece or parcel of land, with any buildings and improvements thereon erected, situate, lying and being in the Town of Smithtown, County of Suffolk, and State of New York, described on the Tax Map of the Suffolk County Real Property Tax Service Agency as District 0800, Section 125.00, Block 02.00, Lot 005.000, and acquired by tax deed on January 07, 2014, from Angie M. Carpenter, the County Treasurer of Suffolk County, New York, and recorded on January 15, 2014, in Liber 12760, at Page 401, and otherwise known and designated by the Town of Smithtown, as Lots 266 and 267, on a certain map entitled "Map of Smithtown Pines, Unit Four", filed in the Office of the Clerk of Suffolk County on March 2, 1945 as Map No. 1423; and

FURTHER, notwithstanding the above description, it is the intention of this conveyance to give title only to such property as was acquired by the County of Suffolk by Tax Deed on January 07, 2014, from Angie M. Carpenter, the County Treasurer of Suffolk County, New York, and recorded on January 15, 2014 in Liber 12760 at Page 401.

WHEREAS, in accordance with Suffolk County Local Law No. 16-1976, provision has been made for the sale of such real property acquired by the County through tax sale; and

WHEREAS, JOHN DIFILIPPO, AS TO A 50% INTEREST AND ARTHUR M. SARTORAS, AS TO A 50% INTEREST have made application of said above described parcel and JOHN DIFILIPPO, AS TO A 50% INTEREST AND ARTHUR M. SARTORAS, AS TO A 50% INTEREST have paid the application fee and have paid $88,403.17, as payment of taxes, penalties, interest, recording fees, and any other charges due the County of Suffolk, pursuant to Local Law, by applicant, through November 30, 2014; now, therefore be it

1st **RESOLVED**, this Legislature, being the State Environmental Quality Review Act (SEQRA) Lead Agency, hereby finds and determines that adoption of this law is not an action within the meaning of the State Environmental Quality Review Act and the regulations adopted thereto. See 6 N.Y.C.R.R. Section 617.2(b) (2). The Legislature further finds and determines that even if the adoption of the local law is an action within the meaning of SEQRA, the adoption of law is a Type II action constituting a legislative decision in connection with routine or continuing agency administration and management, not including new programs or major reordering of priority. See 6 N.Y.C.R.R. Section 617.13(d) (15) and (21). As a Type II action, the Legislature has no further responsibilities under SEQRA 6 N.Y.C.R.R. Section 617.5(a)(1); and be it further

2nd **RESOLVED**, that the Director of Real Estate, and/or her designee, be and she hereby is authorized to execute and acknowledge a Quitclaim Deed to JOHN DIFILIPPO, AS TO A 50% INTEREST AND ARTHUR M. SARTORAS, AS TO A 50% INTEREST, 261 Peconic Street, Ronkonkoma, NY 11779, to transfer the interest of Suffolk County in the above described property and on the above described terms.

DATED:

APPROVED BY: _____
County Executive of Suffolk County

Date of Approval: _____

SUFFOLK COUNTY
DIVISION OF REAL PROPERTY
ACQUISITION AND MANAGEMENT
CLOSING STATEMENT

1595

May 23, 2014

Tax Map No.: 0800-125.00-02.00-005.000
Name of Last Legal Fee Owner: JOHN DIFILIPPO, AS TO A 50% INTEREST AND ARTHUR M. SARTORAS, AS TO A 50% INTEREST

TREASURER'S COMPUTATION	$76,027.08
Taxes.....2013/2014	$12,357.76
Certified Mail Fees	$18.33
License/Storage Fee	OPEN
Repairs	OPEN
Other Expenses	OPEN
TOTAL	$88,403.17
Monies Received	$88,403.17
RESOLUTION AMOUNT	$88,403.17

PREPARED BY:

Peter Belyea
Redemption Unit
(631)853-5932

APPROVED:

Annette Brownell 5/23/2014
Accounting
PB:lag

COMPUTATION BY SUFFOLK COUNTY TREASURER

DISTRICT	SECTION	BLOCK	LOT
0800	125.00	02.00	005.000

ITEM #:

A. PRINCIPAL AMOUNT DUE ON ALL UNPAID TAXES:

YEAR	AMOUNT
2008/09	$ 6,881.93
2009/10	$ 16,266.69
2010/11	$ 16,432.86
2011/12	$ 15,601.15
2012/13	$ 14,508.77

	TOTAL:	$ 69,691.40
B. INTEREST DUE		$ 2,715.34
C. TOTAL		$ 72,406.74
D. 5% LINE C		$ 3,620.34
SUBTOTAL		**$ 76,027.08**
E. FEE		
F. MISC	**2013/14 PROPERTY TAXES**	**$ 12,357.76**
G. MISC	**CERTIFIED MAIL FEES**	**$ 18.33**
H. MISC		
TOTAL AMOUNT DUE:		**$ 88,403.17**

CERTIFICATION BY COUNTY TREASURER

I, Diane M. Stuke, Deputy County Treasurer of the County of Suffolk, in the State of New York, do hereby certify that the above monies are now due and owing upon the real property sought to be redeemed and that such sums are applied by law and taken from official books and records in my custody.

IN TESTIMONY WHEREOF, I have hereunder set my hand and affixed my official seal at Riverhead, County of Suffolk and State of New York.
12-Mar-14

Diane M. Stuke
Deputy County Treasurer

**Interest and penalty computed to and including 09/08/14

DZ

1595

STATEMENT OF FINANCIAL IMPACT
OF PROPOSED SUFFOLK COUNTY LEGISLATION

1. Type of Legislation

Resolution X

2. Title of Proposed Legislation

Authorizing the sale, pursuant to Local Law No. 16-1976, of real property acquired under Section 46 of the Suffolk County Tax Act
JOHN DIFILIPPO, AS TO A 50% INTEREST AND ARTHUR M. SARTORAS, AS TO A 50% INTEREST
0800-125.00-02.00-005.000

3. Purpose of Proposed Legislation

Convey County owned parcel to prior owner

4. Will the Proposed Legislation have a fiscal impact? Yes X No____

5. If the answer to Item 4 is "yes", on what will it impact?
(circle appropriate category)

County	Town	Economic Impact
Village	School District	Other (Specify):
Library District	Fire District	

6. If the answer to item 4 is "yes", provide detailed explanation of Impact

The County will recoup the amount of taxes paid on the property taken by the tax deed.

7. Total Financial Cost of Funding over 5 years on each affected Political or other subdivision

N/A

8. Proposed Source of Funding

N/A

9. Timing of Impact

2014

10. Typed Name & Title of Preparer | Signature of Preparer | Date

Peter Belyea | | 5/23/14

NEIL TOOMB | Neil Toomb |

1595

FINANCIAL IMPACT
2014 PROPERTY TAX LEVY
COST TO THE AVERAGE TAXPAYER

GENERAL FUND

	2014 PROPERTY TAX LEVY	2014 COST TO AVG TAXPAYER	2014 FEV TAX RATE PER $1000
TOTAL		$0.00	$0.000

POLICE DISTRICT AND DISTRICT COURT

	2014 PROPERTY TAX LEVY	2014 COST TO AVG TAXPAYER	2014 FEV TAX RATE PER $1000
TOTAL		$0.00	$0.000

COMBINED

	2014 PROPERTY TAX LEVY	2014 COST TO AVG TAXPAYER	2014 FEV TAX RATE PER $1000
TOTAL		$0.00	$0.000

NOTES:
1) SOURCE FOR NUMBER OF FAMILY PARCELS AND CORRESPONDING ASSESSED VALUATION: SUFFOLK COUNTY REAL PROPERTY, SEPTEMBER 2012.
2) SOURCE FOR TOTAL TAXABLE ASSESSED VALUATION FOR COUNTY PURPOSES: SCHEDULE A, REPORT OF ASSESSED VALUATION FOR 2012-2013.
3) SOURCE FOR EQUALIZATION RATES: TENTATIVE 2012 COUNTY EQUALIZATION RATES ESTABLISHED BY THE NEW YORK STATE BOARD OF EQUALIZATION AND ASSESSMENTS.

To be completed by the Executive Budget Office

800-125-2-5

1595

Revisions
07-29-98
04-11-01
11-20-02

WINSTON DR.
W.D.G
F.D. 24
F.D. 25
MOBREY
TOWN OF SMITHTOWN
GRANDVIEW
LONE OAK PATH
PINERIDGE DR.
LA.
(SHADY LANE)
VALANT CT.
LEDGEWOOD DR.
LEGION DR.
HAZEL DR.
OAK
WHITE
SHUBERT DR.

LEGEND

Property or R/W Line
Owners Common Owner
Subdivision Lot Line
Subdivision Lot No.
Subdivision Block/Bldg. No.
Deed Dimension
Block Line
Block No.
County Line
School District Line
Fire District Line
Water District Line
Light District Line
Highway District Line
Refuse District Line
Protective District Line
Ambulance District Line

UNLESS OTHERWISE ALL PROPERTIES ARE WITHIN THE FOLLOWING DISTRICTS:
SCHOOL 6
FIRE 24 25
LIGHT
SEWER
HYDRANT
WATER
REFUSE

NOTICE
MAINTENANCE, ALTERATION, SALE OR DISTRIBUTION OF ANY PORTION OF THE SUFFOLK COUNTY TAX MAP IS PROHIBITED

COUNTY OF SUFFOLK ©
Real Property Tax Service Agency
County Center Riverhead, N Y 11901
SCALE IN FEET

KEY MAP

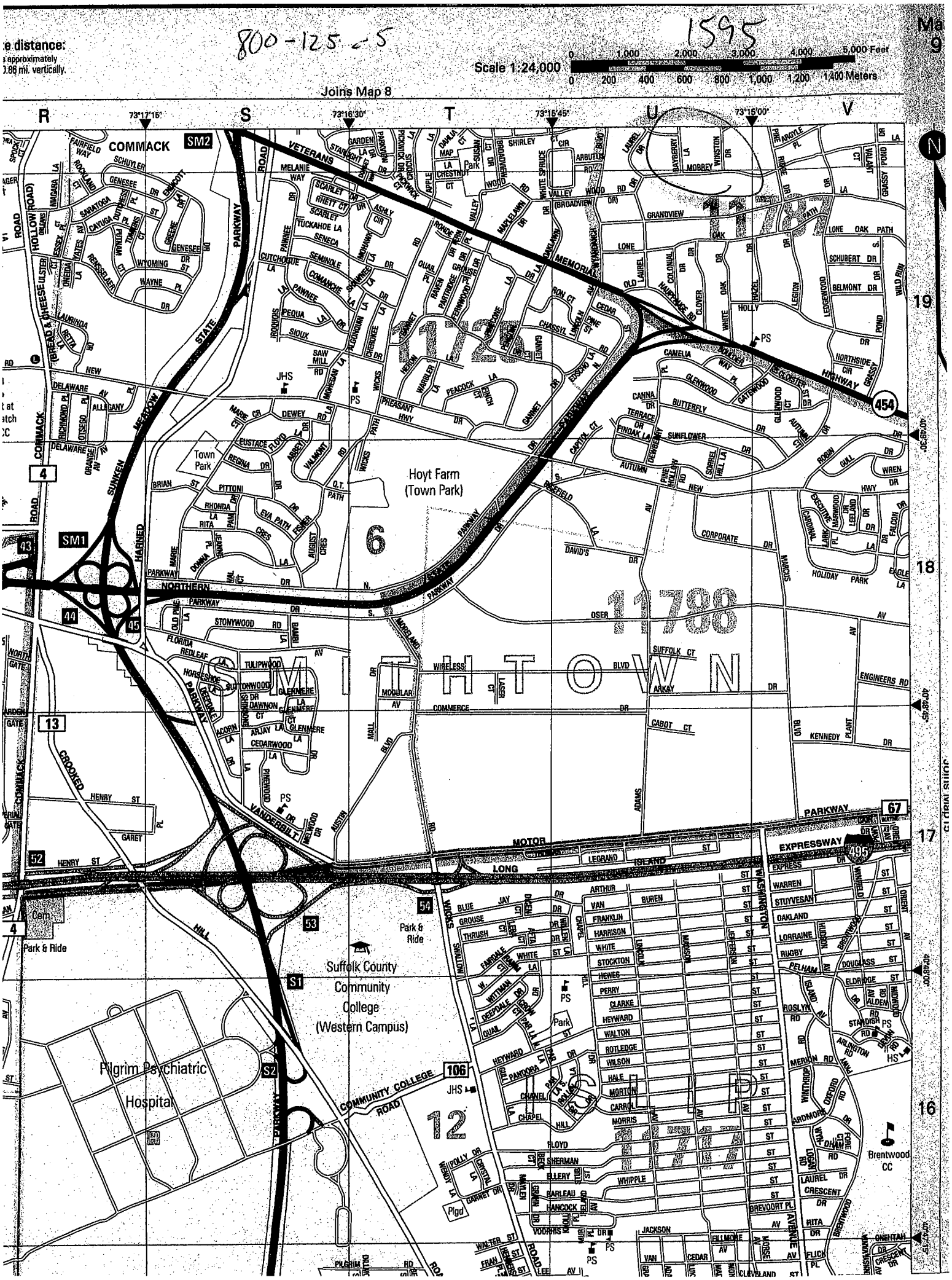

e distance:
approximately
.86 mi. vertically.
800-125-5
1595
Scale 1:24,000
0 1,000 2,000 3,000 4,000 5,000 Feet
0 200 400 600 800 1,000 1,200 1,400 Meters
Joins Map 8
R S T U V
73°17'15"
73°16'30"
73°15'45"
73°15'00"
COMMACK
SM2
SM1
VETERANS MEMORIAL HIGHWAY
11787
11726
11788
11774
Hoyt Farm (Town Park)
Town Park
6
MITHTOWN
NORTHERN PARKWAY
SUNKEN MEADOW STATE PARKWAY
HARNED ROAD
CROOKED HILL
VANDERBILT PARKWAY
MOTOR PARKWAY
LONG ISLAND EXPRESSWAY
Park & Ride
Suffolk County Community College (Western Campus)
Pilgrim Psychiatric Hospital
COMMUNITY COLLEGE ROAD
12
Brentwood CC
Joins Map 9
19
18
17
16

COUNTY OF SUFFOLK

1595

Steven Bellone
SUFFOLK COUNTY EXECUTIVE

Department of
Economic Development and Planning

Joanne Minieri
Deputy County Executive and Commissioner

Division of Real Property
Acquisition and Management

May 27, 2014

Jon Schneider, Deputy County Executive
H. Lee Dennison Bldg. – 12th Floor
Hauppauge, New York 11788-0099

Re: Tax Map No. 0800-125.00-02.00-005.000
JOHN DIFILIPPO, AS TO A 50% INTEREST AND ARTHUR M. SARTORAS, AS TO A 50% INTEREST

Dear Mr. Schneider:

Enclosed herewith for your approval is an original of the proposed resolution with documentation pursuant to:

Local Law No. 16-1976, as amended – Authorizing the redemption of real property.

I would appreciate your placing this on the legislative agenda at your earliest convenience.

Very truly yours,

Ronald W. Holik for
Wayne R. Thompson
Real Property Management Supervisor

WRT:PB:lag

Attachment

cc: Dennis M. Cohen, Chief Deputy County Executive
Lisa Santeramo, Assistant Deputy County Executive
Tom Vaughn, Director of Intragovernmental Relations
CE Reso Review (e-copy)
Sarah Lansdale, Planning Director, Division of Planning and Environment (e-copy)
Alice Kubicsko, Inventory (e-copy)

1596

Intro. Res. No. - 2014 Laid on Table 6/17/14

Introduced by Presiding Officer on request of the County Executive

RESOLUTION NO. -2014, AMENDING THE 2014 CAPITAL BUDGET AND PROGRAM AND APPROPRIATING FUNDS IN CONNECTION WITH THE RECONSTRUCTION OF CR 3, PINELAWN ROAD, TOWNS OF HUNTINGTON AND BABYLON (CP 5510)

WHEREAS, the Commissioner of Public Works has requested funds for engineering in connection with the reconstruction of CR 3, Pinelawn Road; and

WHEREAS, sufficient funds are not included in the 2014 Capital Budget and Program to cover the cost of said request and pursuant to Suffolk County Charter, Section C4-13, an offsetting authorization must be provided from another capital project; and

WHEREAS, Resolution No. 471-1994 and as amended by Resolution No. 461-2006 has established a priority ranking system as the basis for funding Capital Projects such as this project; and

WHEREAS, the County Legislature, by resolution of even date herewith, has authorized the issuance of $250,000 in Suffolk County Serial Bonds; now, therefore, be it

1st **RESOLVED**, that this Legislature, being the lead agency under the State Environmental Quality Review Act ("SEQRA"), Environmental Conservation Law Article 8, hereby finds and determines that this law constitutes a Type II action, pursuant to Section 617.5 (C) (20), (21) and (27) of Title 6 of New York Code of Rules and Regulations ("NYCRR"), in that the law authorizes information collection, including basic data collection and research, and preliminary planning processes necessary to formulate a proposal for an action, but does not commit the County to commence or approve an action, since this law is a Type II action, the Legislature has no further responsibilities under SEQRA; and be it further

2nd **RESOLVED**, that it is hereby determined that this project, with a priority ranking of fifty-five (55) is eligible for approval in accordance with the provisions of Resolution No. 471-1994 as revised by Resolution No. 461-2006; and be it further

3rd **RESOLVED**, that the County Department of Public Works is hereby authorized, empowered and directed to take such action as may be necessary to complete the reconstruction of CR 3, Pinelawn Road, pursuant to Section C8-2 (A) of the Suffolk County Charter; and be it further

4th **RESOLVED**, that the 2014 Capital Budget and Program be and they are hereby amended as follows:

Project No.: 5855
Project Title: Replacement of Bridge over CR 16, Horseblock Road

	Total Est'd Cost	Current 2014 Capital Budget & Program	Revised 2014 Capital Budget & Program
1. Planning & Design	$0	$250,000B	$0
TOTAL	$14,025,000	$550,000	$300,000

Project No.: 5510
Project Title: Reconstruction of CR 3, Pinelawn Road

	Total Est'd Cost	Current 2014 Capital Budget & Program	Revised 2014 Capital Budget & Program
1. Planning & Design	$3,414,000	$0	$250,000B
TOTAL	$41,939,833	$13,000,000	$13,250,000

and be it further

5th **RESOLVED**, that the proceeds of $250,000 in Suffolk County Serial Bonds be and they are hereby appropriated as follows:

Project No.	J.C.	Project Title	Amount
525-CAP-5510.113 (Fund 001 – Debt Service)	50	Reconstruction of CR 3, Pinelawn Road	$250,000

Date:

APPROVED BY:

_____
County Executive of Suffolk County

Date of Approval:

1596

STATEMENT OF FINANCIAL IMPACT
OF PROPOSED SUFFOLK COUNTY LEGISLATION

1. Type of Legislation

Resolution ___X___ Local Law _____ Charter Law _____

2. Title of Proposed Legislation

RESOLUTION NO. -2014, AMENDING THE 2014 CAPITAL BUDGET AND PROGRAM AND APPROPRIATING FUNDS IN CONNECTION WITH THE RECONSTRUCTION OF CR 3, PINELAWN ROAD, TOWNS OF HUNTINGTON AND BABYLON (CP 5510)

3. Purpose of Proposed Legislation

See above.

4. Will the Proposed Legislation Have a Fiscal Impact? **Yes** __X__ **No** _____

5. If the answer to item 4 is "yes", on what will it impact? (circle appropriate category)

County **Town** **Economic Impact**

Village **School District** **Other (Specify):**

Library District **Fire District**

6. If the answer to item 5 is "yes", Provide Detailed Explanation of Impact

SERIAL BONDS WILL BE ISSUED TO FINANCE THIS PROJECT. PRINCIPAL AND INTEREST COSTS WILL BE INCURRED OVER THE LIFE OF THE BONDS.

7. Total Financial Cost of Funding over 5 Years on Each Affected Political or Other Subdivision.

SEE ATTACHED DEBT SCHEDULE

8. Proposed Source of Funding

SERIAL BONDS

9. Timing of Impact

IT IS ANTICIPATED THAT BONDS WILL BE ISSUED FALL OF 2014 AND DEBT SERVICE WILL COMMENCE FALL 2015. THERE IS NO FISCAL IMPACT IN 2014.

10. Typed Name & Title of Preparer	11. Signature of Preparer	12. Date
Nicholas Paglia Asst Executive Analyst		June 10, 2014

SCIN FORM 175b (10/95)

FINANCIAL IMPACT
2015 PROPERTY TAX LEVY*
COST TO THE AVERAGE TAXPAYER

1596

GENERAL FUND

	2014 PROPERTY TAX LEVY	2015* COST TO AVG TAXPAYER	2014 AV TAX RATE PER $100	2014 FEV TAX RATE PER $1000
TOTAL	$55,214	$0.11		$0.000

POLICE DISTRICT AND DISTRICT COURT

	2014 PROPERTY TAX LEVY	2015* COST TO AVG TAXPAYER	2014 AV TAX RATE PER $100	2014 FEV TAX RATE PER $1000
TOTAL	$0	$0.00		$0.000

COMBINED

	2014 PROPERTY TAX LEVY	2015* COST TO AVG TAXPAYER	2014 AV TAX RATE PER $100	2014 FEV TAX RATE PER $1000
TOTAL	$55,214	$0.11		$0.000

**** The Estimated 2015 Cost to Average Taxpayer is based upon the 2014 property tax levy and is provided for informational purposes only.***

NOTES:
1) SOURCE FOR NUMBER OF FAMILY PARCELS AND CORRESPONDING ASSESSED VALUATION: SUFFOLK COUNTY REAL PROPERTY, 2013.
2) SOURCE FOR TOTAL TAXABLE ASSESSED VALUATION FOR COUNTY PURPOSES: SCHEDULE A, REPORT OF ASSESSED VALUATION FOR 2013-2014.
3) SOURCE FOR EQUALIZATION RATES: 2013 COUNTY EQUALIZATION RATES ESTABLISHED BY THE NEW YORK STATE BOARD OF EQUALIZATION AND ASSESSMENTS.

To be completed by the Executive Budget Office

Suffolk County

General Obligation Serial Bonds
Level Debt

1596

Term of Bonds	5
Amount to Bond:	$250,000

Date	Coupon	Principal	Interest	Total Debt Service	Fiscal Debt Service
11/1/2015					
11/1/2016	3.000%	$46,713.62	$8,500.00	$55,213.62	$55,213.62
			$3,455.87	$3,455.87	
11/1/2017	3.000%	$48,301.89	$3,455.87	$51,757.75	$55,213.62
			$2,634.74	$2,634.74	
11/1/2018	3.000%	$49,944.15	$2,634.74	$52,578.89	$55,213.62
			$1,785.69	$1,785.69	
11/1/2019	4.000%	$51,642.25	$1,785.69	$53,427.94	$55,213.62
			$907.77	$907.77	
11/1/2020	4.000%	$53,398.09	$907.77	$54,305.86	$55,213.62
11/1/2021		$250,000.00	$26,068.12	$276,068.12	$276,068.12
11/1/2022					
11/1/2023					
11/1/2024					
11/1/2025					
11/1/2026					
11/1/2027					
11/1/2028					
11/1/2029					
11/1/2030					
11/1/2031					
11/1/2032					
11/1/2033					

1596

2014 INTERGOVERNMENTAL RELATIONS
MEMORANDUM OF SUPPORT

TITLE OF BILL: Amending the 2014 Capital Budget and Program and Appropriating Funds in Connection with the Reconstruction of CR 3, Pinelawn Road, Towns of Huntington and Babylon (CP 5510)

PURPOSE OR GENERAL IDEA OF BILL: provide for additional funds required for the County's consultant engineer, Greenman-Pedersen, Inc., to continue with final design and preparation of Plans, Specifications and Estimate (PS&E) for the intersection realignment of CR 3, Pinelawn Road/Wellwood Avenue and Conklin Street/Long Island Avenue. There has been a tremendous amount of revisions, modifications and redesigns required during the progression of this project due to coordination with Pinelawn Cemetery, various utilities, as well as NYSDOT and FHWA.

SUMMARY OF SPECIFIC PROVISIONS: It is our intent to utilize funds from CP 5855 (Replacement of Bridge over CR 16, Horseblock Road), as revised estimates for engineering have indicated a lower cost to complete design.

JUSTIFICATION: This is enable the Department to keep on schedule with a November 2014 construction letting.

FISCAL IMPLICATIONS: Bonds will be issued to finance this project and principal and interest costs will be incurred over the life of the Bonds.

COUNTY OF SUFFOLK

1596

STEVEN BELLONE
SUFFOLK COUNTY EXECUTIVE

DEPARTMENT OF PUBLIC WORKS

GILBERT ANDERSON, P.E.
COMMISSIONER

PHILIP A. BERDOLT
DEPUTY COMMISSIONER

DARNELL TYSON, P.E.
DEPUTY COMMISSIONER

MEMORANDUM

TO: Jon Schneider, Deputy County Executive

FROM: Gilbert Anderson, P.E. Commissioner

DATE: May 27, 2014

RE: Amending the 2014 Capital Budget and Program and Appropriating Funds in Connection with the Reconstruction of CR 3, Pinelawn Road, Towns of Huntington and Babylon (CP 5510)

Attached is a draft resolution to appropriate the sum of $250,000 for engineering in connection with the above referenced project. There are insufficient funds included in the 2014 Capital Budget and Program for this project and, as such, an offset must be provided. It is our intent to utilize funds from CP 5855 (Replacement of Bridge over CR 16, Horseblock Road), as revised estimates for engineering have indicated a lower cost to complete design.

This request will provide for additional funds required for the County's consultant engineer, Greenman-Pedersen, Inc., to continue with final design and preparation of Plans, Specifications and Estimate (PS&E) for the intersection realignment of CR 3, Pinelawn Road/Wellwood Avenue and Conklin Street/Long Island Avenue, in order to keep on schedule with a November 2014 construction letting. There has been a tremendous amount of revisions, modifications and redesigns required during the progression of this project due to coordination with Pinelawn Cemetery, various utilities, as well as NYSDOT and FHWA.

The Suffolk County Council on Environmental Quality has reviewed these types of projects and has determined that projects of this nature constitutes a Type II action, pursuant to Section 617.5(c) (20), (21) and (27) of Title 6 of New York Code of Rules and Regulations ("NYCRR"), therefore, the Legislature has no further responsibilities under SEQRA.

An e-mail version of this resolution was sent to CE RESO REVIEW saved under the title "Reso-DPW-CP5510(CR3Des).doc".

GA/WH/td
attach.
cc: Dennis M. Cohen, Chief Deputy County Executive
Lisa Santeramo, Assistant Deputy County Executive
Tom Vaughn, Director of Intragovernmental Relations
William Hillman, P.E., Chief Engineer
Charles Jaquin, Acting Head of Finance Division

1597

Intro. Res. No. _____2014 Laid on Table 6/17/18

Introduced by Presiding Officer on request of the County Executive

RESOLUTION NO. -2014, REQUESTING LEGISLATIVE APPROVAL OF A CONTRACT AWARD FOR RENOVATION, OPERATION, MAINTENANCE AND MANAGEMENT OF A RESTAURANT, BAR AND CATERING CONCESSION AT TIMBER POINT COUNTY PARK, GREAT RIVER

WHEREAS, the Department of Parks, Recreation and Conservation mailed out notices to 200 potential bidders and advertised on April 19, 2012 for a restaurant, bar and catering concession contract at Timber Point County Park and distributed three (3) RFP packets to potential vendors; and

WHEREAS, the Department of Parks, Recreation and Conservation received only one (1) complete response, from Lessing's, Inc.; and

WHEREAS, section C38-3(A) of the SUFFOLK COUNTY CHARTER and Suffolk County Standard Operating Procedure I-15B 6.A. (10) ("Procedures for Development and Approval of RFP's and Consultant Contracts") requires the approval of at least two-thirds of the entire membership of the County Legislature when only one response to an RFP is received; and

WHEREAS, an independent evaluation committee reviewed the proposal from Lessing's, Inc. and found the provider's quality of work and experience to be satisfactory and its submitted cost proposal to be acceptable, and have recommended that the Department of Parks, Recreation, and Conservation enter into a contractual agreement with the provider; now therefore be it

1st RESOLVED, that upon receiving at least two-thirds vote of the County Legislature as required by section C38-3(A) of the SUFFOLK COUNTY CHARTER and Suffolk County Standard Operating Procedure I-15B 6.A. (10), the Department of Parks, Recreation, and Conservation enter into a contractual agreement with Lessing's, Inc. for the renovation, operation, maintenance and management of a restaurant, bar and catering concession at Timber Point County Park in Great River.

DATED:

APPROVED BY:

_____

County Executive of Suffolk County

Date of Approval:

STATEMENT OF FINANCIAL IMPACT
OF PROPOSED SUFFOLK COUNTY LEGISLATION

1. Type of Legislation

Resolution X Local Law ____ Charter Law ____ 1597

2. Title of Proposed Legislation

REQUESTING LEGISLATIVE APPROVAL OF A CONTRACT AWARD FOR RENOVATION, OPERATION, MAINTENANCE AND MANAGEMENT OF A RESTAURANT, BAR AND CATERING CONCESSION AT TIMBER POINT COUNTY PARK, GREAT RIVER

3. Purpose of Proposed Legislation

To approve a contract award for a restaurant, bar and catering concession at Timber Point County Park where only one (1) response to the RFP was received.

4. Will the Proposed Legislation Have a Fiscal Impact? Yes X No ___

5. If the answer to item 4 is "yes", on what will it impact? (circle appropriate category)

County Town Economic Impact

Village School District Other (Specify):

Library District Fire District

6. If the answer to item 5 is "yes", Provide Detailed Explanation of Impact

The County will receive as compensation for the contract and the privilege of operating the concession an annual license fee as well as capital improvements throughout the term of the contract.

7. Total Financial Cost of Funding over 5 Years on Each Affected Political or Other Subdivision.

N/A

8. Proposed Source of Funding

N/A

9. Timing Impact

N/A

10. Typed Name & Title of Preparer	11. Signature of Preparer	12. Date
Colleen Logan Hofmeister Principal Contracts Examiner Dept. of Parks, Recreation & Conservation		5/27/14

Debra Kolver Budget Office 1/1/14

1597

FINANCIAL IMPACT
2014 PROPERTY TAX LEVY
COST TO THE AVERAGE TAXPAYER

GENERAL FUND

	2014 PROPERTY TAX LEVY	2014 COST TO AVG TAXPAYER	2014 FEV TAX RATE PER $1000
TOTAL		$0.00	$0.000

POLICE DISTRICT AND DISTRICT COURT

	2014 PROPERTY TAX LEVY	2014 COST TO AVG TAXPAYER	2014 FEV TAX RATE PER $1000
TOTAL		$0.00	$0.000

COMBINED

	2014 PROPERTY TAX LEVY	2014 COST TO AVG TAXPAYER	2014 FEV TAX RATE PER $1000
TOTAL		$0.00	$0.000

NOTES:
1) SOURCE FOR NUMBER OF FAMILY PARCELS AND CORRESPONDING ASSESSED VALUATION: SUFFOLK COUNTY REAL PROPERTY, SEPTEMBER 2012.
2) SOURCE FOR TOTAL TAXABLE ASSESSED VALUATION FOR COUNTY PURPOSES: SCHEDULE A, REPORT OF ASSESSED VALUATION FOR 2012-2013.
3) SOURCE FOR EQUALIZATION RATES: TENTATIVE 2012 COUNTY EQUALIZATION RATES ESTABLISHED BY THE NEW YORK STATE BOARD OF EQUALIZATION AND ASSESSMENTS.

To be completed by the Executive Budget Office

COUNTY OF SUFFOLK

1597

STEVEN BELLONE
SUFFOLK COUNTY EXECUTIVE

DEPARTMENT OF
PARKS, RECREATION AND CONSERVATION

GREG DAWSON
COMMISSIONER

2014 INTERGOVERNMENTAL RELATIONS MEMORANDUM OF SUPPORT

TITLE OF BILL: Requesting legislative approval of a contract award for renovation, operation, maintenance and management of a restaurant, bar and catering concession at Timber Point County Park, Great River.

PURPOSE OR GENERAL IDEA OF BILL: The purpose of this resolution is to approve the award of a contract authorizing Lessing's, Inc. to operate a restaurant, bar and catering concession at Timber Point County Park, West Sayville.

SUMMARY OF SPECIFIC PROVISIONS: This resolution approves the License award of contract—as the result of a full-fledged Request for Proposal--authorizing Lessing's, Inc. to operate a restaurant, bar and catering concession at Timber Point County Park, Great River. Based upon the Licensee's response to the RFP, and the recommendations of an Independent Evaluation Committee, the County has determined that the Licensee's proposal demonstrates relevant experience, offers good value to the County, and serves the public interest.

JUSTIFICATION: The Department of Parks implemented a full-fledged Request for Proposal for the renovation, operation, maintenance and management of a restaurant, bar and catering concession at Timber Point County Park and only received one proposal. An independent Evaluation Committee reviewed the proposal from Lessings, Inc. and found the provider's quality of work and experience to be satisfactory and its submitted cost proposal to be acceptable. This resolution will allow a Historic and Culturally Significant Property to be protected, renovated and maintained and serve the public interest.

FISCAL IMPLICATIONS: The County will receive as compensation for the privilege of operating the Concession, an annual license fee as well as capital improvements throughout the term of the contract.

MONTAUK HIGHWAY – P.O. BOX 144 WEST SAYVILLE, NEW YORK 11796-0144 (631) 854-4949 FAX: (631) 854-4977

COUNTY OF SUFFOLK

1597

STEVEN BELLONE
SUFFOLK COUNTY EXECUTIVE

DEPARTMENT OF
PARKS, RECREATION AND CONSERVATION

GREG DAWSON
COMMISSIONER

TO: JON SCHNEIDER, Deputy County Executive

FROM: GREG DAWSON, Commissioner

CC: DENNIS COHEN, Chief Deputy County Executive
LISA SANTERAMO, Assistant Deputy County Executive
TOM VAUGHN, Director of Intergovernmental Relations

DATE: May 27, 2014

RE: REQUESTING LEGISLATIVE APPROVAL OF A CONTRACT AWARD FOR RENOVATION, OPERATION, MAINTENANCE AND MANAGEMENT OF A RESTAURANT, BAR AND CATERING CONCESSION AT TIMBER POINT COUNTY PARK, GREAT RIVER

Enclosed please find a draft resolution and supporting documentation relative to the above-captioned. An e-mail version of this resolution was sent to CE RESO REVIEW under the file name "RESO-PKS-Requesting Approval of Awarding Contract for Timber Point Catering Concession.doc."

The Department of Parks, Recreation and Conservation advertised on April 19, 2012 for a restaurant, bar and catering concession contract at Charles R. Dominy County Park. Three (3) RFP packets were distributed to potential vendors. However, there was only one (1) response which was from Lessing's, Inc.

After reviewing the proposal from Lessing's, an independent evaluation committee found its terms acceptable and recommended that the Departments of Parks, Recreation and Conservation enter into an agreement with Lessing's, Inc. for the restaurant, bar and catering concession at Timber Point County Park. This resolution requests Legislative approval of the contract award to Lessing's, Inc.

Should you require anything further, please contact my office at 4-4947.

Enclosures

MONTAUK HIGHWAY – P.O. BOX 144 WEST SAYVILLE, NEW YORK 11796-0144 (631) 854-4949 FAX: (631) 854-4977

SUFFOLK COUNTY PARKS

1598

Intro. Res. No. _____2014 Laid on Table 6/17/14

Introduced by Presiding Officer on request of the County Executive

RESOLUTION NO. -2014, REQUESTING LEGISLATIVE APPROVAL OF A CONTRACT AWARD FOR RENOVATION, OPERATION, MAINTENANCE AND MANAGEMENT OF A RESTAURANT, BAR AND CATERING CONCESSION AT CHARLES R. DOMINY COUNTY PARK, WEST SAYVILLE

WHEREAS, the Department of Parks, Recreation and Conservation mailed out notices to 200 potential bidders and advertised on June 28, 2012 for a restaurant, bar and catering concession contract at Charles R. Dominy County Park and distributed two (2) RFP packets to potential vendors; and

WHEREAS, the Department of Parks, Recreation and Conservation received only one (1) complete response, from Lessing's, Inc.; and

WHEREAS, section C38-3(A) of the SUFFOLK COUNTY CHARTER and Suffolk County Standard Operating Procedure I-15B 6.A. (10) ("Procedures for Development and Approval of RFP's and Consultant Contracts") requires the approval of at least two-thirds of the entire membership of the County Legislature when only one response to an RFP is received; and

WHEREAS, an independent evaluation committee reviewed the proposal from Lessing's, Inc. and found the provider's quality of work and experience to be satisfactory and its submitted cost proposal to be acceptable, and have recommended that the Department of Parks, Recreation, and Conservation enter into a contractual agreement with the provider; now therefore be it

1st RESOLVED, that upon receiving at least two-thirds vote of the County Legislature as required by section C38-3(A) of the SUFFOLK COUNTY CHARTER and Suffolk County Standard Operating Procedure I-15B 6.A. (10), the Department of Parks, Recreation, and Conservation enter into a contractual agreement with Lessing's, Inc. for the renovation, operation, maintenance and management of a restaurant, bar and catering concession at Charles R. Dominy County Park in West Sayville.

DATED:

APPROVED BY:

_____

County Executive of Suffolk County

Date of Approval:

STATEMENT OF FINANCIAL IMPACT
OF PROPOSED SUFFOLK COUNTY LEGISLATION

1598

1. Type of Legislation

Resolution X Local Law _____ Charter Law ____

2. Title of Proposed Legislation

REQUESTING LEGISLATIVE APPROVAL OF A CONTRACT AWARD FOR RENOVATION, OPERATION, MAINTENANCE AND MANAGEMENT OF A RESTAURANT, BAR AND CATERING CONCESSION AT CHARLES R. DOMINY COUNTY PARK, WEST SAYVILLE

3. Purpose of Proposed Legislation

To approve a contract award for a restaurant, bar and catering concession at Charles R. Dominy County Park where only one (1) response to the RFP was received.

4. Will the Proposed Legislation Have a Fiscal Impact? Yes X No ____

5. If the answer to item 4 is "yes", on what will it impact? (circle appropriate category)

County Town Economic Impact

Village School District Other (Specify):

Library District Fire District

6. If the answer to item 5 is "yes", Provide Detailed Explanation of Impact

The County will receive as compensation for the contract and the privilege of operating the concession an annual license fee as well as capital improvements throughout the term of the contract.

7. Total Financial Cost of Funding over 5 Years on Each Affected Political or Other Subdivision.

N/A

8. Proposed Source of Funding

N/A

9. Timing Impact

N/A

10. Typed Name & Title of Preparer	11. Signature of Preparer	12. Date
Colleen Logan Hofmeister Principal Contracts Examiner Dept. of Parks, Recreation & Conservation		5/27/14

SCIN FORM 175b (10/95)

Debra Kolyer

6/6/14

1598

FINANCIAL IMPACT
2014 PROPERTY TAX LEVY
COST TO THE AVERAGE TAXPAYER

GENERAL FUND

	2014 PROPERTY TAX LEVY	2014 COST TO AVG TAXPAYER	2014 FEV TAX RATE PER $1000
TOTAL		$0.00	$0.000

POLICE DISTRICT AND DISTRICT COURT

	2014 PROPERTY TAX LEVY	2014 COST TO AVG TAXPAYER	2014 FEV TAX RATE PER $1000
TOTAL		$0.00	$0.000

COMBINED

	2014 PROPERTY TAX LEVY	2014 COST TO AVG TAXPAYER	2014 FEV TAX RATE PER $1000
TOTAL		$0.00	$0.000

NOTES:
1) SOURCE FOR NUMBER OF FAMILY PARCELS AND CORRESPONDING ASSESSED VALUATION: SUFFOLK COUNTY REAL PROPERTY, SEPTEMBER 2012.
2) SOURCE FOR TOTAL TAXABLE ASSESSED VALUATION FOR COUNTY PURPOSES: SCHEDULE A, REPORT OF ASSESSED VALUATION FOR 2012-2013.
3) SOURCE FOR EQUALIZATION RATES: TENTATIVE 2012 COUNTY EQUALIZATION RATES ESTABLISHED BY THE NEW YORK STATE BOARD OF EQUALIZATION AND ASSESSMENTS.

To be completed by the Executive Budget Office

COUNTY OF SUFFOLK

1598

STEVEN BELLONE
SUFFOLK COUNTY EXECUTIVE

DEPARTMENT OF
PARKS, RECREATION AND CONSERVATION

GREG DAWSON
COMMISSIONER

2014 INTERGOVERNMENTAL RELATIONS
MEMORANDUM OF SUPPORT

TITLE OF BILL: Requesting legislative approval of a contract award for renovation, operation, maintenance and management of a restaurant, bar and catering concession at Charles R. Dominy County Park, West Sayville.

PURPOSE OR GENERAL IDEA OF BILL: The purpose of this resolution is to approve the award of a contract authorizing Lessing's, Inc. to operate a restaurant, bar and catering concession at Charles R. Dominy County Park, West Sayville.

SUMMARY OF SPECIFIC PROVISIONS: This resolution approves the License award of contract—as the result of a full-fledged Request for Proposal--authorizing Lessing's, Inc. to operate a restaurant, bar and catering concession at Charles R. Dominy County Park, West Sayville. Based upon the Licensee's response to the RFP, and the recommendations of an Independent Evaluation Committee, the County has determined that the Licensee's proposal demonstrates relevant experience, offers good value to the County, and serves the public interest.

JUSTIFICATION: The Department of Parks implemented a full-fledged Request for Proposal for the renovation, operation, maintenance and management of a restaurant, bar and catering concession at Charles R. Dominy County Park and only received one proposal. An independent Evaluation Committee reviewed the proposal from Lessings, Inc. and found the provider's quality of work and experience to be satisfactory and its submitted cost proposal to be acceptable. This resolution will allow a Historic and Culturally Significant Property to be protected, renovated and maintained and serve the public interest.

FISCAL IMPLICATIONS: The County will receive as compensation for the privilege of operating the Concession, an annual license fee as well as capital improvements throughout the term of the contract.

MONTAUK HIGHWAY – P.O. BOX 144 WEST SAYVILLE, NEW YORK 11796-0144 (631) 854-4949 FAX: (631) 854-4977

SUFFOLK COUNTY PARKS

COUNTY OF SUFFOLK

1598

STEVEN BELLONE
SUFFOLK COUNTY EXECUTIVE

DEPARTMENT OF
PARKS, RECREATION AND CONSERVATION

GREG DAWSON
COMMISSIONER

TO: JON SCHNEIDER, Deputy County Executive

FROM: GREG DAWSON, Commissioner

CC: DENNIS COHEN, Chief Deputy County Executive
LISA SANTERAMO, Assistant Deputy County Executive
TOM VAUGHN, Director of Intergovernmental Relations

DATE: May 27, 2014

RE: REQUESTING LEGISLATIVE APPROVAL OF A CONTRACT AWARD FOR RENOVATION, OPERATION, MAINTENANCE AND MANAGEMENT OF A RESTAURANT, BAR AND CATERING CONCESSION AT CHARLES R. DOMINY COUNTY PARK, WEST SAYVILLE

Enclosed please find a draft resolution and supporting documentation relative to the above-captioned. An e-mail version of this resolution was sent to CE RESO REVIEW under the file name "RESO-PKS-Requesting Approval of Awarding Contract for West Sayville Catering Concession.doc."

The Department of Parks, Recreation and Conservation advertised on June 28, 2012 for a restaurant, bar and catering concession contract at Charles R. Dominy County Park. Two (2) RFP packets were distributed to potential vendors. However, there was only one (1) response which was from Lessing's, Inc.

After reviewing the proposal from Lessing's, an independent evaluation committee found its terms acceptable and recommended that the Departments of Parks, Recreation and Conservation enter into an agreement with Lessing's, Inc. for the restaurant, bar and catering concession at Charles R. Dominy County Park. This resolution requests Legislative approval of the contract award to Lessing's, Inc.

Should you require anything further, please contact my office at 4-4947.

Enclosures

MONTAUK HIGHWAY – P.O. BOX 144 WEST SAYVILLE, NEW YORK 11796-0144 (631) 854-4949 FAX: (631) 854-4977

SUFFOLK COUNTY PARKS

1599

Intro Res. No. -2014 Laid on Table 6/17/14
Introduced by Presiding Officer on request of the County Executive

RESOLUTION NO. -2014, AUTHORIZING EXECUTION OF AGREEMENT BY THE ADMINISTRATIVE HEAD OF SUFFOLK COUNTY SEWER DISTRICT NO. 3 SOUTHWEST AND WESTBROOK VILLAGE (IS-1432.1)

WHEREAS, Westbrook Village is outside the boundary of Suffolk County Sewer District No. 3 – Southwest; and

WHEREAS, Westbrook Village had previously received approval (121-2011) for connection to Suffolk County Sewer District No. 3 – Southwest and due to the redesign of the project configuration, it is now anticipated that Westbrook Village will require a total discharge capacity of Sixty-Nine Thousand Nine Hundred Eighty-Four gallons per day (69,984 GPD), the developer has petitioned and requested the Administrative Head of the District for permission to discharge said capacity; and

WHEREAS, it has been determined by the Administrative Head of the District that the District has wastewater treatment capacity in excess of its own needs; and

WHEREAS, the connection is subject to the approval of the New York State Department of Environmental Conservation (NYSDEC); and

WHEREAS, the proposed flow has received the approval of the Suffolk County Sewer Agency (Resolution 17-2014) with a connection fee of $15.00 per gallon per day of sewage capacity; for a total connection fee of (One Million Forty-Nine Thousand Seven Hundred Sixty Dollars ($1,049,760.00), for the said Sixty-Nine Thousand Nine Hundred Eighty-Four gallons per day (69,984 GPD) of capacity; to the district; and

WHEREAS, it will be financially beneficial to Suffolk County Sewer District No. 3 – Southwest and Suffolk County, as well as in the environmental interest of all of Suffolk County, for the connection to be made; now therefore be it

1st RESOLVED, that pursuant to Section 617.5(c) (11) and (20), of the SEQRA regulations, this project is a Type II Action, and requires no further action, now, therefore, be it further

2nd RESOLVED, that the Administrative Head of the District be and hereby is authorized, directed and empowered to enter into contracts and agreements with the developer upon such terms and conditions as he may deem necessary relating to connections to the District of lands adjacent to Suffolk County Sewer District No. 3 – Southwest and that they be required to post a surety bond or bonds and deposit cash or securities with the County

Treasurer in those instances that the Administrative Head deems necessary to ensure performance of such agreements and contracts.

3rd RESOLVED, that the Suffolk County Department of Public Works is hereby authorized, empowered, and directed to take such action as may be necessary, pursuant to section C8-2(L&M) of the Suffolk County Charter.

DATED:
APPROVED BY:

_____
County Executive of Suffolk County
Date of Approval:

1599

SUFFOLK COUNTY SEWER AGENCY

RESOLUTION NO: 17 - 2014

AMENDING THE APPROVAL OF THE CONNECTION OF WESTBOOK VILLAGE (IS 1432.1) TO SUFFOLK COUNTY SEWER DISTRICT NO. 3 - SOUTHWEST

WHEREAS, Westbook Village is a proposed 320 mixed unit subdivision with a Clubhouse in Great River, New York, on property identified on the Suffolk County Tax Map as District 0500, Section 211.00, Block 01.00, Lot 005.001, and

WHEREAS, the Premises are not located within the boundaries of Suffolk County Sewer District No. 3 – Southwest (the "District"), or within the boundaries of any other municipal sewer district, and

WHEREAS, Westbook Village on December 20, 2010, received amended Formal Approval (20B-2010) for Seventy-Seven Thousand gallons per day (77,000 GPD), of capacity in the District's sewage treatment, and

WHEREAS, due to the redesign of the project configuration, it is now anticipated that Westbook Village will require a total discharge capacity of Sixty-Nine Thousand Nine Hundred Eighty-Four gallons per day (69,984 GPD), and

WHEREAS, the Westbook Village has applied to this Agency for permission to connect Westbook Village to the sanitary sewerage facilities of the District, and

WHEREAS, the District's sewage treatment plant continues to have sufficient capacity to accept the wastewater which is expected to emanate from Westbook Village, and

WHEREAS, the connection of Westbook Village to the District will be financially beneficial to the District, and environmentally beneficial to Suffolk County, and

WHEREAS, Westbook Village received Conceptual Certification on February 23, 2004, (SA 1-2004), for Seventy Six Thousand Two Hundred (76,200) gallons per day, establishing the connection fee at the Fifteen Dollar ($15.00 GPD) rate for said Sixty-Nine Thousand Nine Hundred Eighty-Four gallons per day (69,984 GPD), capacity, and

WHEREAS, pursuant to Section 617.5(c) (11) and (20), of the SEQRA regulations, this project is listed as a Type II Action, and requires no further action, and

NOW, THEREFORE, IT IS

1st RESOLVED, that pursuant to Section 617.5(c) (11) and (20), of the SEQRA regulations, this project is a Type II Action, and requires no further action, now, therefore, be it further

2nd RESOLVED, that Westbook Village, be permitted to connect to the sanitary sewerage facilities of the District, upon such terms and conditions as the Administrative Head of the District may impose, subject to the terms and conditions hereof, and it is further

3rd RESOLVED, that Sixty-Nine Thousand Nine Hundred Eighty-Four gallons per day (69,984 GPD), of sewage flow in the District's sewage treatment plant be allocated to Westbook Village, and it is further

4th RESOLVED, that the connection authorized herein is subject to the approval of the Suffolk County Legislature and the New York State Department of Environmental Conservation, and it is further

5th RESOLVED, that the connection authorized herein is subject to the execution of an agreement (the "Connection Agreement") between the developer of Westbook Village, the District, the Suffolk County Department of Public Works ("DPW"), the Suffolk County Department of Health Services, the County of Suffolk and this Agency, which agreement shall contain such terms and conditions as the Administrative Head of the District shall determine, and it is further

6th RESOLVED, that the connection fee to be paid for Westbook Village, shall be paid at the Fifteen Dollars ($15.00 GPD) per gallon of sewage per day rate for the Sixty-Nine Thousand Nine Hundred Eighty-Four gallons per day (69,984 GPD), upon the execution of the Connection Agreement or as approved by the Agency Staff for a total of One Million Forty-Nine Thousand Seven Hundred Sixty Dollars ($1,049,760.00) and it is further

7th RESOLVED, that Westbrook Village shall, at its sole cost, expense and effort, construct a sewage collection facility for Westbook Village, and shall offer to dedicate the said facility to this Agency, or to this Agency's nominee, at no charge, and it is further

8th RESOLVED, that the developer of Westbook Village shall furnish a Letter of Credit, in form, wording and amount, and on such terms and conditions, as determined by this Agency's staff, as security for the construction of the sewage collection facility for the developer of Westbook Village, as well as for all of the developer's obligations under the Connection Agreement, and it is further

9th RESOLVED, that this resolution shall become null and void, and of no further force or effect, without any further action by this Agency or notice to the developer of Westbrook Village if, within one (1) year from the date of the adoption hereof, an agreement in furtherance of the authorization granted herein (the Connection Agreement), in form and content satisfactory to the Chairman of this Agency, has not been negotiated and fully executed by all parties thereto.

(Suffolk County Sewer Agency Meeting April 14, 2014)

1599

STATEMENT OF FINANCIAL IMPACT
OF PROPOSED SUFFOLK COUNTY LEGISLATION

1. Type of Legislation

Resolution X Local Law _____ Charter Law _____

2. Title of Proposed Legislation

RESOLUTION NO. -2014, AUTHORIZING EXECUTION OF AGREEMENT BY THE ADMINISTRATIVE HEAD OF SUFFOLK COUNTY SEWER DISTRICT NO. 3 SOUTHWEST AND WESTBROOK VILLAGE (IS-1432.1)

3. Purpose of Proposed Legislation

To authorize execution of an agreement by the Administrative Head of Suffolk County Sewer District No.3 - Southwest with the Westbrook Village (IS-1432.1), a mixed use complex seeking permission to discharge 69,984 GPD.

4. Will the Proposed Legislation Have a Fiscal Impact? Yes X No _____

5. If the answer to Item 4 is "yes," on what will it impact? (Circle appropriate category)

County	**Town**	**Economic Impact**
Village	**School District**	**Other (Specify):**
Library District	**Fire District**	• SD # 3 - Southwest

6. If the answer to item 4 is "yes," Provide Detailed Explanation of Impact

The connection fee of $15.00 per gallon per day (69,984 GPD) of $1,049,760.00 will be paid to the District.

7. Total Financial Cost of Funding over 5 Years on Each Affected Political or Other Subdivision.

NA

8. Proposed Source of Funding

NA

9. Timing of Impact

NA

10. Typed Name & Title of Preparer	11. Signature of Preparer	12. Date
Craig A Platt, Assistant Director Sewer District Activation	CAPlatt	May 22, 2014

SCIN FORM 175b (10/95)

Debra Kolyce
Assistant Office

6/6/14

1599

FINANCIAL IMPACT
2014 PROPERTY TAX LEVY
COST TO THE AVERAGE TAXPAYER

GENERAL FUND

	2014 PROPERTY TAX LEVY	2014 COST TO AVG TAXPAYER	2014 FEV TAX RATE PER $1000
TOTAL		$0.00	$0.000

POLICE DISTRICT AND DISTRICT COURT

	2014 PROPERTY TAX LEVY	2014 COST TO AVG TAXPAYER	2014 FEV TAX RATE PER $1000
TOTAL		$0.00	$0.000

COMBINED

	2014 PROPERTY TAX LEVY	2014 COST TO AVG TAXPAYER	2014 FEV TAX RATE PER $1000
TOTAL		$0.00	$0.000

NOTES:
1) SOURCE FOR NUMBER OF FAMILY PARCELS AND CORRESPONDING ASSESSED VALUATION: SUFFOLK COUNTY REAL PROPERTY, SEPTEMBER 2012.
2) SOURCE FOR TOTAL TAXABLE ASSESSED VALUATION FOR COUNTY PURPOSES: SCHEDULE A, REPORT OF ASSESSED VALUATION FOR 2012-2013.
3) SOURCE FOR EQUALIZATION RATES: TENTATIVE 2012 COUNTY EQUALIZATION RATES ESTABLISHED BY THE NEW YORK STATE BOARD OF EQUALIZATION AND ASSESSMENTS.

To be completed by the Executive Budget Office

COUNTY OF SUFFOLK

1599

STEVEN BELLONE
SUFFOLK COUNTY EXECUTIVE

DEPARTMENT OF PUBLIC WORKS

PHILIP A BERDOLT
DEPUTY COMMISSIONER

GILBERT ANDERSON, P.E.
COMMISSIONER

DARNELL TYSON, P.E.
DEPUTY COMMISSIONER

2014 Intergovernmental Relations Memorandum of Support

Title of Bill:

RESOLUTION NO. -2014, AUTHORIZING EXECUTION OF AGREEMENT BY THE ADMINISTRATIVE HEAD OF SUFFOLK COUNTY SEWER DISTRICT NO. 3 SOUTHWEST AND WESTBROOK VILLAGE (IS-1432.1)

Purpose or General Idea of Bill:

To authorize execution of an agreement by the Administrative Head of Suffolk County Sewer District No.3 - Southwest with the Westbrook Village (IS-1432.1), a mixed use complex seeking permission to discharge 69,984 GPD.

Summary of Specific Provisions:

Allow the connection of the project to SCSD #3 - Southwest.

Justification:

Economic and environmental benefit with affordable housing

Fiscal Implications:

None

SCDPW Project: Westbrook Village **SCDPW Project No.:** IS-1432.1

SUFFOLK COUNTY IS AN EQUAL OPPORTUNITY / AFFIRMATIVE ACTION EMPLOYER

335 YAPHANK AVENUE ■ YAPHANK, N.Y. 11980 ■ (631) 852-4010 FAX (631) 852-4150

COUNTY OF SUFFOLK

1599

STEVEN BELLONE
SUFFOLK COUNTY EXECUTIVE

DEPARTMENT OF PUBLIC WORKS

PHILIP A BERDOLT
DEPUTY COMMISSIONER

GILBERT ANDERSON, P.E.
COMMISSIONER

DARNELL TYSON, P.E.
DEPUTY COMMISSIONER

MEMORANDUM

To: Jon Schneider, Deputy County Executive

From: Gilbert Anderson, P.E., Commissioner, SCDPW

Date: May 22, 2014

Subject: **AUTHORIZING EXECUTION OF AGREEMENT BY THE ADMINISTRATIVE HEAD OF SUFFOLK COUNTY SEWER DISTRICT NO. 3 SOUTHWEST AND WESTBROOK VILLAGE (IS-1432.1)**

Attached is a draft resolution filed as **Reso DPW SA 17-2014 Westbrook Village (IS-1432.1)** and appropriate forms with the backup filed as **Backup- Reso DPW SA 17-2014 Westbrook Village (IS-1432.1) SCIN 175A**. This is a resolution authorizing the execution of a connection agreement by the Administrative Head of Suffolk County Sewer District No. 3 – Southwest with Westbrook Village (IS-1432.1).

Project Facts:	
Type/Units:	320-mixed unit (Senior Condominium/Townhouse units, Rental Apartments, Condominium/Townhouse units, and a Clubhouse)
Acreage:	37.8±
Flow:	69,984
Sewer District:	#3 – Southwest
Groundwater Zone:	I
Legislative Districts:	9th, 10th, 11th, 14th, 15th, 16th, 17th

GA:JD:cap

cc:

Dennis M Cohen, Chief Deputy County Executive
Lisa Santeramo, Assistant Deputy County Executive
Tom Vaughn, Director of Intergovernmental Relations
John Donovan, P.E., SCDPW
Janice McGovern, P.E., SCDPW
Chuck Jaquin, SCDPW
Robert A Braun, Esq., SCDOL
Debra Kolyer, CE Office
Nick Paglia, Assistant Executive Analyst
Elizabeth Duffy, SCDPW
CE Reso Review
Craig A Platt, Secretary, SCSA

1600

Intro Res. No. -2014 Laid on Table 6/17/14
Introduced by Presiding Officer on request of the County Executive

RESOLUTION NO. -2014, AUTHORIZING EXECUTION OF AN AGREEMENT BY THE ADMINISTRATIVE HEAD OF SCSD NO. 3 – SOUTHWEST WITH 1471 STRAIGHT PATH (1477.1-007)

WHEREAS, 1471 Straight Path is an existing apartment building, outside the boundary of Suffolk County Sewer District No. 3 – Southwest; and

WHEREAS, a sewer collection system has been constructed along the Wyandanch Commercial Corridor which will connect to the Southwest Sewer District via the collection system, and

WHEREAS, the owner of 1471 Straight Path, has petitioned and requested the Administrative Head of the District for permission to discharge One Thousand Three Hundred gallons per day (1,300 GPD) of wastewater, and

WHEREAS, it has been determined by the Administrative Head of the District that the District has wastewater treatment capacity (One Thousand Three Hundred gallons per day) in excess of its own needs; and

WHEREAS, the connection is subject to the approval of the New York State Department of Environmental Conservation (NYSDEC); and

WHEREAS, the proposed flow has received the approval of the Suffolk County Sewer Agency (Resolution 20-2014) and pursuant to the Connection Agreement for the construction and connection of the sewer system in the Wyandanch Commercial Corridor, connections made from designated parcels to the sewer system during the first five years after its completion would be charged no connection fee (Local Law 11-2010), and the subject parcel is one of the designated parcels, and

WHEREAS, it will be in the environmental interest of all of Suffolk County, for the connection to be made; now therefore be it

1st RESOLVED, that pursuant Local Law 11-2010, (RESOLUTION NO. 229-2010, ADOPTING LOCAL LAW NO. 11 -2010, A LOCAL LAW AMENDING CHAPTER 424 (SEWERS) TO WAIVE SEWER CONNECTION FEES FOR ECONOMIC REVITALIZATION IN URBAN RENEWAL AREAS) the connection fee for this project is waived as it meets the established criteria, now, therefore, be it further

2nd RESOLVED, that pursuant to Section 617.5(c) (11) and (20), of the SEQRA regulations, this project is a Type II Action, and requires no further action, now, therefore, be it further

3rd RESOLVED, that the Administrative Head of the District be and hereby is authorized, directed and empowered to enter into contracts and agreements with the developer upon such terms and conditions as he may deem necessary relating to connections to the District of lands adjacent to Suffolk County Sewer District No. 3 – Southwest and that they be required to post a surety bond or bonds and deposit cash or securities with the County Treasurer in those instances that the Administrative Head deems necessary to ensure performance of such agreements and contracts.

4th RESOLVED, that the County Department of Public Works is hereby authorized, empowered, and directed to take such action as may be necessary, pursuant to section C8-2(L&M) of the Suffolk County Charter.

DATED:

APPROVED BY:

_____

County Executive of Suffolk County
Date of Approval:

1600

SUFFOLK COUNTY SEWER AGENCY

RESOLUTION NO: 20 - 2014

AUTHORIZING THE FORMAL APPROVAL
FOR THE CONNECTION OF
1471 STRAIGHT PATH (BA-1477.1-007)
TO SUFFOLK COUNTY SEWER DISTRICT NO. 3 - SOUTHWEST

WHEREAS, 1471 Straight Path is an existing garden apartment building situated on Straight Path in Wyandanch, New York, on property identified on the Suffolk County Tax Map as District 0100, Section 055.00, Block 03.00, Lot 005.000, and

WHEREAS, the Premises is not located within the boundaries of Suffolk County Sewer District No. 3 – Southwest (the "District"), or within the boundaries of any other municipal sewer district, but is located within the Agency project "Wyandanch Commercial Corridor" (WCC), and

WHEREAS, Pursuant to the agreement for the construction and connection of the main in the Wyandanch Commercial Corridor, connections made from designated parcels to the main during the first five years after its completion would be charged no connection fee, and the subject parcel is one of the designated parcels, and

WHEREAS, it is anticipated that 1471 Straight Path will generate a wastewater flow of One Thousand Three Hundred gallons per day (1,300 GPD), and

WHEREAS, the property owner has applied to this Agency for permission to connect 1471 Straight Path to the sanitary sewerage facilities of the District, and

WHEREAS, the District's sewage treatment plant has sufficient capacity to accept the flow which is expected to emanate from 1471 Straight Path, and

WHEREAS, the connection of 1471 Straight Path to the District will be environmentally beneficial to Suffolk County, and

WHEREAS, Pursuant to Title 6 NYCRR Part 617.5(c) (11) and (20), this project involved the extension of utility distribution facilities, including gas, electric, telephone, cable, water and sewer connections to render service in approved subdivisions or in connection with any action on this list; and routine or continuing agency administration and management, not including new programs or major reordering of priorities that may affect the environment. No further action under SEQRA should be taken by the Sewer Agency, and

NOW, THEREFORE, IT IS

1st RESOLVED, that the SEQRA requirements for this project have been met, and requires no further action, now, therefore, be it further

2nd RESOLVED, that 1471 Straight Path be permitted to connect to the sanitary sewerage facilities of the District, upon such terms and conditions as the Administrative Head of the District may impose, subject to the terms and conditions hereof, and it is further

3rd RESOLVED, that One Thousand Three Hundred gallons per day (1,300 GPD), of capacity in the District's sewage treatment plant be allocated to 1471 Straight Path, and it is further

4th RESOLVED, that the connection authorized herein is subject to the approval of the Suffolk County Legislature and the New York State Department of Environmental Conservation, and it is further

5th RESOLVED, that the connection authorized herein is subject to the execution of an agreement (the "Connection Agreement") between the owner of 1471 Straight Path, the District, the Suffolk County Department of Public Works ("DPW"), the Suffolk County Department of Health Services, the County of Suffolk, and this Agency, which agreement shall contain such terms and conditions as the Administrative Head of the District shall determine, and it is further

6th RESOLVED, that Pursuant to the agreement for the construction and connection of the main in the Wyandanch Commercial Corridor, connections made from designated parcels to the collection system during the first five years after its completion would be charged no connection fee, and the subject parcel is one of the designated parcels, and it is further

7th RESOLVED, that the owner of 1471 Straight Path shall, at its sole cost, expense and effort, construct a sewage collection facility for 1471 Straight Path and shall offer to dedicate the said facility to this Agency, or to this Agency's nominee, at no charge, and it is further

8th RESOLVED, that the owner of 1471 Straight Path shall furnish a Letter of Credit, in form, wording and amount, and on such terms and conditions, as determined by this Agency's staff, as security for the construction of the sewage collection facility for 1471 Straight Path, as well as for all of the developer's obligations under the Connection Agreement, and it is further

9th RESOLVED, that this resolution shall become null and void, and of no further force or effect, without any further action by this Agency or notice to the owner of 1471 Straight Path if, within one (1) year from the date of the adoption hereof, an agreement in furtherance of the authorization granted herein (the Connection Agreement), in form and content satisfactory to the Chairman of this Agency, has not been negotiated and fully executed by all parties thereto.

(Suffolk County Sewer Agency Meeting – May 19, 2014)

STATEMENT OF FINANCIAL IMPACT
OF PROPOSED SUFFOLK COUNTY LEGISLATION

1600

1. Type of Legislation

Resolution X Local Law _____ Charter Law _____

2. Title of Proposed Legislation

RESOLUTION NO. -2014, AUTHORIZING EXECUTION OF AN AGREEMENT BY THE ADMINISTRATIVE HEAD OF SCSD NO. 3 – SOUTHWEST WITH 1471 STRAIGHT PATH (1477.1-007)

3. Purpose of Proposed Legislation

To authorize execution of an agreement by the Administrative Head of Suffolk County Sewer District No.3 - Southwest with 1471 Straight Path (BA-1477.1-007), seeking permission to discharge 1,300 GPD.

4. Will the Proposed Legislation Have a Fiscal Impact? Yes _____ No X

5. If the answer to Item 4 is "yes," on what will it impact? (Circle appropriate category)

County	**Town**	**Economic Impact**
Village	**School District**	**Other (Specify):**
Library District	**Fire District**	

6. If the answer to item 4 is "yes," Provide Detailed Explanation of Impact

Pursuant to the agreement for the construction and connection of the main in the Wyandanch Commercial Corridor and Local Law 11-2011, connections made from designated parcels to the main during the first five years after its completion would be charged no connection fee, and the subject parcel is one of the designated parcels. (Wyandanch Rising)

7. Total Financial Cost of Funding over 5 Years on Each Affected Political or Other Subdivision.

NA

8. Proposed Source of Funding

NA

9. Timing of Impact

NA

10. Typed Name & Title of Preparer	11. Signature of Preparer	12. Date
Craig A Platt, Assistant Director Sewer District Activation	Craig A. Platt	May 22, 2014

SCIN FORM 175b (10/95)

Debra Kulyer
Budget Office

6/6/14

1600

FINANCIAL IMPACT
2014 PROPERTY TAX LEVY
COST TO THE AVERAGE TAXPAYER

GENERAL FUND

	2014 PROPERTY TAX LEVY	2014 COST TO AVG TAXPAYER	2014 FEV TAX RATE PER $1000
TOTAL		$0.00	$0.000

POLICE DISTRICT AND DISTRICT COURT

	2014 PROPERTY TAX LEVY	2014 COST TO AVG TAXPAYER	2014 FEV TAX RATE PER $1000
TOTAL		$0.00	$0.000

COMBINED

	2014 PROPERTY TAX LEVY	2014 COST TO AVG TAXPAYER	2014 FEV TAX RATE PER $1000
TOTAL		$0.00	$0.000

NOTES:
1) SOURCE FOR NUMBER OF FAMILY PARCELS AND CORRESPONDING ASSESSED VALUATION: SUFFOLK COUNTY REAL PROPERTY, SEPTEMBER 2012.
2) SOURCE FOR TOTAL TAXABLE ASSESSED VALUATION FOR COUNTY PURPOSES: SCHEDULE A, REPORT OF ASSESSED VALUATION FOR 2012-2013.
3) SOURCE FOR EQUALIZATION RATES: TENTATIVE 2012 COUNTY EQUALIZATION RATES ESTABLISHED BY THE NEW YORK STATE BOARD OF EQUALIZATION AND ASSESSMENTS.

To be completed by the Executive Budget Office

COUNTY OF SUFFOLK

1600

STEVEN BELLONE
SUFFOLK COUNTY EXECUTIVE

DEPARTMENT OF PUBLIC WORKS

VINCENT FALKOWSKI, P.E.
CHIEF DEPUTY COMMISSIONER

GILBERT ANDERSON, P.E.
COMMISSIONER

PHILIP A BERDOLT
DEPUTY COMMISSIONER

2014 Intergovernmental Relations Memorandum of Support

Title of Bill:

RESOLUTION NO. -2014, AUTHORIZING EXECUTION OF AN AGREEMENT BY THE ADMINISTRATIVE HEAD OF SCSD NO. 3 - SOUTHWEST WITH
1471 STRAIGHT PATH (1477.1-007)

Purpose or General Idea of Bill:

To authorize execution of an agreement by the Administrative Head of Suffolk County Sewer District No.3 - Southwest with 1471 Straight Path (BA-1477.1-007), seeking permission to discharge 1,300 GPD.
(Wyandanch Rising)

Summary of Specific Provisions:

Allow the connection of the project to SCSD #3 - Southwest via the Wyandanch Commercial Corridor sewer collection system.

Justification:

Economic and environmental benefit

Fiscal Implications:

None

SCDPW Project: 1471 Straight Path **Project No.:** 1477.1-007

SUFFOLK COUNTY IS AN EQUAL OPPORTUNITY / AFFIRMATIVE ACTION EMPLOYER

335 YAPHANK AVENUE ■ YAPHANK, N.Y. 11980 ■ (631) 852-4204 FAX (631) 852-4659

COUNTY OF SUFFOLK

1600

STEVEN BELLONE
SUFFOLK COUNTY EXECUTIVE

DEPARTMENT OF PUBLIC WORKS

PHILIP A BERDOLT
DEPUTY COMMISSIONER

GILBERT ANDERSON, P.E.
COMMISSIONER

DARNELL TYSON, P.E.
DEPUTY COMMISSIONER

MEMORANDUM

To: Jon Schneider, Deputy County Executive

From: Gilbert Anderson, P.E., Commissioner, SCDPW

Date: May 22, 2014

Subject: **RESOLUTION NO. -2014, AUTHORIZING EXECUTION OF AN AGREEMENT, PURSUANT TO LOCAL LAW 11-2010, BY THE ADMINISTRATIVE HEAD OF SCSD NO. 3 - SOUTHWEST WITH 1471 STRAIGHT PATH (1477.1-007) (WYANDANCH RISING)**

Attached is a draft resolution filed as **Reso DPW SA 20-2014 1471 Straight Path (1477.1-007)** and appropriate forms with the backup filed as **Backup-Reso DPW SA 20-2014 1471 Straight Path (1477.1-007) SCIN 175A**. This is a resolution authorizing the execution of a connection agreement by the Administrative Head of Suffolk County SCSD No. 3 – Southwest with 1471 Straight Path (1477.1-007) (Wyandanch Rising).

Project Facts:

Type/units:	Apartment Building/8	Flow:	1,300 GPD
Area:	0.3±	SEQRA:	NA
SCTM #:	0100-05500-0300-005000	Groundwater Zone:	I
SCSD:	No. 3 – Southwest – Wyandanch Rising	Legislative District:	16th

GA:JD:cap

cc: Dennis M. Cohen, Chief Deputy County Executive
Lisa Santeramo, Assistant Deputy County Executive
Tom Vaughn, Director of Intergovernmental Relations
John Donovan, P.E., SCDPW
Janice McGovern, P.E., SCDPW
Chuck Jaquin, SCDPW
Robert A. Braun, Esq., SCDOL
Debra Kolyer, CE Office
Nick Paglia, Assistant Executive Analyst
Elizabeth Duffy, SCDPW
CE Reso Review
Craig A. Platt, Secretary, SCSA

Introductory Resolution No. 1601-14 Laid on Table 6/17/14

Introduced by Presiding Officer on request of the County Executive

RESOLUTION NO. -2014, APPROVAL OF AUCTION RULES FOR THE DISPOSITION OF SURPLUS PROPERTY ACQUIRED UNDER THE SUFFOLK COUNTY TAX ACT

WHEREAS, the disposition of property acquired through the Suffolk County Tax Act is regulated pursuant to Article A42 of the Administrative Code, Laws of Suffolk County, and Part III, Chapter 1070, Laws of Suffolk County (together hereinafter the "Code"); and

WHEREAS, §A42-4(M) and §1070-6 of the Code pertain to the formulation and adoption of auction rules and procedures; and

WHEREAS, §1070-6 requires the approval by the Suffolk County Legislature of auction rules and regulations formulated by the Department of Economic Development and Planning, Division of Real Property Acquisition and Management; and

WHEREAS, the Department of Economic Development and Planning, Division of Real Property Acquisition and Management, has previously filed a copy of the proposed rules for the auction of surplus County real estate with the County Executive and the Clerk of the Legislature and a copy of said proposed rules is annexed as Exhibit "A"; now, therefore be it

1st **RESOLVED**, that the auction rules annexed as Exhibit "A" are approved for use immediately on filing of this approved resolution with the Clerk of the Legislature.

DATED:

APPROVED BY:

_____

County Executive of Suffolk County

Date:

Exhibit "A"

Auction Terms and Conditions - Definitions

Affiliate: A Business Entity in which the Purchaser has, directly or indirectly, a voting, controlling or ownership interest of twenty percent (20%) or more, or which has such an interest in Purchaser.

Assignment: The transfer or conveyance of a right or contract from one person or Business Entity to another.

Business Entity: A legal being, other than an individual, natural person, e.g., a corporation, limited liability company, partnership, joint venture or syndication. A Business Entity must be duly formed in accordance with all applicable provisions of law and have the legal capacity, among other things, to be sued and to own property in the State of New York.

County: The County of Suffolk.

Deed: An instrument in writing, duly executed and delivered, that conveys title to real property.

Default: A failure by the Purchaser to comply with any provision of the Terms and Conditions.

Director: The Director of the Division of Real Property Acquisition and Management.

Immediate Family: A spouse, issue, including adopted children, sibling or parent.

Lien: A claim or encumbrance of property, e.g., for the payment of a debt.

Landlocked: A parcel of land that has no routes of ingress and egress (by deed, easement or filed map roadways). Note a parcel located on an unopen roadway, a/k/a **paper street, is NOT** landlocked but is considered inaccessible at present.

Memorandum of Sale: The contract between the County and the Purchaser for the purchase of the Property, which incorporates, by reference, the Terms and Conditions of Sale and any special terms and conditions.

Occupancy/Occupy: The Inhabiting of a parcel improved by a residential structure as a person's sole residence.

Principal: Any individual or Business Entity who participates at the auction through a duly authorized agent.

Property: The particular parcel of County-owned real property and any improvements thereon, sold at public auction to the Purchaser.

Purchase Price: The highest bid made and accepted for the Property at the auction.

Purchaser: The successful bidder(s) at the auction sale and, where the Purchaser is a Business Entity, then each partner or any director(s), officer(s), or shareholder(s) having a total of twenty percent (20%) or more of the Purchaser's voting stock, ownership interest or control.

Third party bidder: An individual who bids solely as a duly authorized agent of another individual or Business Entity.

Third party bidding: Bidding on behalf of a Purchaser/Principal through a duly authorized agent.

Title Closing: The transfer of title to or ownership of the Property to the Purchaser; the date upon which such transfer is made.

Upset Price: The amount at which bidding starts on the Property.

AUCTION TERMS AND CONDITIONS

The public auction of surplus land by the County of Suffolk will be conducted by the Division of Real Property Acquisition and Management pursuant to auction terms and conditions approved by the Suffolk County Legislature. This document contains the terms and conditions which might pertain to such auctions. It may be supplemented by the subsequent approval by the Suffolk County legislature of additional or different terms and conditions.

Each separate auction will be governed by those particular terms and conditions included herein that are determined by the Director of Real Estate to be applicable to said auction. The terms and conditions that pertain to an auction will be published in the Auction Brochure published for that auction.

1. **AUCTION INVENTORY** - Properties that will be auctioned by the County include parcels forfeited by the prior owners as a result of failure to pay taxes. The County's rights thereto are pursuant to the Suffolk County Tax Act as set forth in Chapter 1195 of the laws of Suffolk County and Article 11 of the Real Property Tax Law of the State of New York, and all known rights of redemption under said provisions of law are believed to have been extinguished by the tax sale proceedings, and/or as a result of forfeiture. Auction parcels may also include parcels acquired by condemnation, but no longer needed as part of the public project. The County reserves the right, in its sole discretion, to withdraw from the auction at any time, any of the properties listed in the Auction Brochure or in any other listing of surplus real property available for auction.

2. **OFFICIAL IDENTIFICATION** - For purposes of the auction, each parcel is identified by a district, section, block and lot number as shown on the Suffolk County Tax Map. No other identification is guaranteed. Descriptions in the auction materials pertaining to any auctioned property, such as the size, exact location, street requirements and

information as to existing structures, are approximate only. Purchasers should verify all information relative to each property.

3. **NOTIFICATION OF AUCTION** - The Notice of Auction will be published in the official newspapers as required by the Suffolk County Code. In addition to said publication, not less than one month prior to each auction, an Auction Brochure which includes both a list of the properties expected to be offered by auction and a document entitled "Terms and Conditions of Sale 2014 Auction(s)" will be published on the internet at www.suffolkcountyny.gov. *Copies of the Auction Brochure will be available at the Division of Real Property Acquisition and Management Offices and at the Riverhead County Center, the Offices of the Suffolk County Legislature, each Town Hall and various County offices.

* Internet address will be relocated to Suffolk County Department of Economic Development & Planning, Division of Real Property Acquisition and Management.

4. **TERMS AND CONDITIONS OF SALE** - The "Terms and Conditions of Sale - 2014 Auction(s)" document will specify the rules applicable to the auction for which it is prepared and dated. Failure of the purchaser to comply with the published auction rules, terms and conditions shall constitute a default and may result in cancellation of a sale and forfeiture of both the down payment and the auction fee.

5. **AUCTION RULES** - In addition to those rules and conditions that are set forth in the "Terms and Conditions of Sale - 2014 Auction(s)" all sales of surplus County property will be subject to the following:

   a) Approval of the deed and proposed conveyance by the Suffolk County Legislature, which approval may precede the sale or follow it;

   b) Any state of facts an accurate survey or personal inspection of the premises would disclose;

   c) Applicable zoning/land use/building/health and environmental regulations;

   d) Easements, covenants, conditions and rights-of-way of record existing at the time of the levy of the tax, the non-payment of which resulted in the tax sale;

   e) For the immediate tax year, pro rata real estate taxes; and

   f) For assessment purposes, the purchaser shall be deemed to be the owner prior to the next taxable status date following the closing;

   g) The rights, if any, of tenants and persons in possession, and;

   h) Outstanding water and sewer assessments and other unpaid liens or charges (including, but not limited to, demolition charges, interest and penalties, condominium fees) whether they have been billed or not as of the date of the auction, all as specified in the Auction Brochure;

i) Any covenants, easements or conditions imposed by the County Planning or any other Department and listed in the Auction Brochure, or by the Legislature as part of its approval of the sale;

j) Purchaser's signing a Certification as part of the bid finalization that he or she has read and understood the Terms and Conditions as set forth in the pertinent Auction Brochure;

k) Such additional contract terms and conditions as may be set forth in the Auction Brochure or Memorandum of Sale.

6. **NO WARRANTIES** - All real property in the auction, including any building thereon, is sold **"AS IS"** and without any representation or warranty whatsoever as to the physical condition or as to title.

7. **REFUNDS** - In the event that a sale is cancelled or the bid is rejected by the Suffolk County Legislature, the down payment and other monies paid when the Memorandum of Sale was executed will be refunded without interest.

8. **AUCTION PROCEDURES** - As determined by the Director to be appropriate or necessary, the following rules or conditions shall be included in the "Terms and Conditions of Sale - 2014 Auction(s)".

a) County **general auctions** are Public Auctions at which a person must be present to participate as a bidder. Third party bidding may be accepted provided the bidder identifies the purchaser/principal for whom he or she is acting as an agent and provided the purchaser/principal pre-registers pursuant to paragraph 11 herein. **No absentee bids** are accepted.

b) The County may conduct **special auctions**, that is, auctions limited to certain properties, based on their type or condition, for example, Brownfield sites; or their potential use, for example, affordable housing sites and commercial properties; or based on any other special circumstance relating to the properties to be auctioned. At special auctions, sealed bids from bidders who are not physically present and third party bidding may be accepted provided the bidder identifies the purchaser/ principal for whom he or she is acting as an agent and provided the purchaser/principal pre-registers pursuant to paragraph 11 herein.

c) **Registration** shall be required prior to any auction. Prior to the auction, each registered bidder will be assigned a bidding number that must be displayed in order to bid.

d) **The auction may be divided into Sessions**. The auctioneer will accept bids in increments, as described below, until such time as no further bids are entered. Thereupon the parcel is declared, "Sold" to the highest bidder. All successful bids in one Session must be finalized (see the next subsection regarding finalization) before commencement of the next Session, or the underlying sales will be deemed cancelled.

e) Directly after the sale of a parcel, the **purchaser or third party bidder, in purchaser's absence, must finalize** the sale by signing the Terms and Conditions of

Sale, or Memorandum of Sale, as applicable, and depositing the down payment and the auction fee with the auction cashier. Delay in finalizing the sale may be cause for cancellation. *If a purchaser fails to finalize the purchase of any parcel, he, she or it shall not be permitted to bid on any further parcels and the Director may immediately cancel all other sales that took place at the same auction to the same purchaser.* In the event of cancellation due to failure to finalize a purchase, the subject parcel(s) may be returned to the auction block or withdrawn from the auction.

9. **PRE-AUCTION INFORMATION** - Collecting and verifying any information in regard to auctioned parcels, including, for example, address, location, zoning and land use restrictions, building or health code requirements, taxes or assessed value is the responsibility of the buyer. Much of this information may be obtained from the Town or Village in which the property is located. The County is not responsible to provide real property information, other than the Suffolk County Tax Map number. Purchaser's misunderstanding or failure to verify property information is not grounds for rescinding or canceling an auction sale. THE COUNTY MAKES NO WARRANTY EXPRESSED OR IMPLIED IN CONNECTION WITH ANY AUCTION SALE.

10. **INSPECTION OF PROPERTY** - The Auction Brochure will indicate whether the property may be inspected and how arrangements for inspection can be made. Inspection or entry onto the property may be prohibited by the County due to safety or any other reason. Where inspection is permitted, persons intending to participate at the auction should inspect and investigate the property in which they are interested prior to the auction sale. Inspection of commercial and industrial properties must not interfere with businesses operating thereon. Parcels that are improved by occupied homes may only be inspected on the dates and at the times set by the County in its publications, or on the dates and at the times confirmed in writing by the Division of Real Property Acquisition and Management. Entering onto any auction parcel at any other time will be grounds for disqualification from the auction and may amount to a trespass subject to prosecution.

11. **REGISTRATION OF BIDDERS** - All bidders, except third party bidders, shall be required to register prior to all auctions. In the event of third party bidding, the purchaser/principal shall be required to register prior to the auction. Such registration will be a condition of participation in said auction and shall consist of the execution of a registration form designated for use by the Director and may further require providing an official photographic identification, address, social security number or tax identification number, disclosure statement or other personal or financial documentation that would verify the identity and financial ability of the person or business entity to participate in the auction. As designated by the Director, pre-registration may require filing a bond, deposit or other evidence (as may be required) of financial ability to complete the terms and conditions of the sale at the estimated fair market value.

When third party bidding is permitted, individuals acting on behalf of others, not in attendance at the auction, must produce a "Power of Attorney" or other appropriate

authorizing documentation, duly executed and notarized. Incorporated entities (Inc., Corp., LLC.) are required to provide a corporate resolution prior to the auction authorizing the entity's participation in said auction and a corporate resolution authorizing the purchase of real property prior to the transfer of title.

12. **FORM OF BIDDING** - Each bidder is responsible to signal his or her bid to the auctioneer. Bids may be signaled either by raising the paddle bearing the unique number issued to him or her for purposes of bidding at the auction or, in auctions not requiring individual bidder paddles, by securing a floor usher to signal the desired bid.

13. **MEMORANDUM OF SALE** - The purchaser's offer and agreement to purchase will be formalized in a "Terms and Conditions of Sale" or "Memorandum of Sale", referred to hereafter jointly as the "Memorandum of Sale", as may be utilized at the particular auction. Purchaser or third party bidder in purchaser's absence is obligated to execute the Memorandum of Sale and pay the down payment and auction fee before the end of the auction session at which the property was sold. As a material condition of the Memorandum of Sale:

    a. Purchaser waives any claim to special, consequential or punitive damages, attorney's fees, reimbursement for any expenses incurred in reliance on completion of the sale, improvements of property, or for license fees already paid should the sale subsequently not be approved or closing not occur; and

    b. Purchaser acknowledges that no property interest, either real or personal, is acquired by purchaser and any and all claims for specific performance and/or any right to file a Notice of Pendency against any property offered for bidding and/or sale should the sale subsequently not be approved or closing not occur are hereby waived.

14. **DOWNPAYMENT** - Following acceptance of the winning bid, and prior to the start of the next auction Session, the purchaser or third party bidder in purchaser's absence shall deposit a down payment in the amount of twenty percent (20%) of the sale price, or as otherwise specified. **ONLY cash, certified checks, bank checks, money orders or traveler's checks are acceptable for the down payment.** If the purchaser fails to produce the acceptable payment, as described, the parcel may be resold at the same auction or withdrawn from the auction, in the sole discretion of the County.

15. **RESTRICTIVE COVENANT ON RESIDENTIALLY-IMPROVED PARCELS** - A parcel offered at auction which is improved by a residential structure, may be offered subject to a restrictive covenant that will be noted in the Auction Brochure and included in the deed conveying the parcel. The covenant requires the owner of the parcel, or his or her children, parents, successors and assigns to occupy said premises. Said restriction requiring owner occupancy shall run with the land for a period of ten (10) years subsequent to the transfer of title from the County of Suffolk. The owner of the parcel may sell the parcel at any time in which case the new owner, his or her children, parents, successors and assigns shall be required to occupy the premises for the balance of the

ten (10) year period. The County shall be given written notice of any transfer of the parcel within said ten (10) year period. The Director shall reserve to the County a right of reverter should this restriction be violated. It is the responsibility of the purchaser to note which parcels are sold subject to the said restrictive covenant.

16. **SPECIFICALLY DESIGNATED SMALL LOT PARCELS**–In order to promote the development of residential dwellings for first time home buyers and/or occupants, parcels which may not meet minimum zoning code requirements of the municipal zoning district in which the parcel is located shall be offered to convey such parcel to the highest bidder at a special auction who:

(i) agrees, in writing, within sixty (60) days of the date of such auction, to apply for and diligently pursue, using best efforts and at such bidder's sole cost and expense, a building permit, to allow the construction of a single family residential dwelling on such parcel that substantially conforms in size and appearance to the residential dwellings located within the immediately surrounding residential community; (ii) agrees, in writing, within one hundred eighty (180) days of the date of such auction, to apply for and diligently pursue, using best efforts and at such bidder's sole cost and expense, any and all variances and/or other relief from such minimum zoning requirements; and (iii) agrees, in writing, to accept title to such parcel subject to the covenants contained in this section.

1.) Upon the granting of any required variance or other relief from the minimum zoning requirements of the municipal zoning district in which the parcel is located, and the issuance of a building permit to construct such single family residential dwelling on such parcel, fee title shall be promptly conveyed to such highest bidder by deed containing the following covenants, which covenants shall run with the land:

a.) "The use of the parcel herein described by the grantee is hereby restricted solely to the development of a single family residential dwelling unit for first time home owners or buyers; with all right, title, and interest reverting back to the County of Suffolk, at the sole option of the County of Suffolk, in the event the grantee, at any time, uses or attempts to use the parcel herein described for any other use or purpose, including, without limitation, no use or purpose. This reverter clause shall also apply to any transferee from the grantee who is not a first time home owner or buyer."

b.) "All right, title, and interest to the parcel herein described shall revert back to the County of Suffolk should any one or more of the following events occur:

[1.] If the grantee, or any transferee from the grantee who is not a first time home owner or buyer, fails to substantially complete the construction of a single family residential

dwelling upon the parcel described herein within three (3) years from the date of transfer to the grantee, unless one or more extensions of time is granted, in writing, for good cause shown, by the Suffolk County Director of Affordable Housing or any successor thereto. Notwithstanding the foregoing, such extensions shall not exceed, in the aggregate, a period of four (4) years from the date of transfer to the grantee, unless approved by a duly enacted resolution of the County of Suffolk;

[2.] If the income of the first time home owner or buyer, at the time of occupancy of the single family dwelling constructed on the parcel described herein, should exceed 80% of the HUD established median income for the Nassau-Suffolk Primary Metropolitan Statistical Area adjusted by family size;

[3.] If the sale price of the single family dwelling constructed on the parcel described herein exceeds 60% of the median sales price for Suffolk County single family dwellings, based upon the State of New York Mortgage Agency Guidelines;

[4.] If the first time home owner or buyer of the single family dwelling constructed on the parcel described herein fails to occupy such single family dwelling as his and/or her primary residence for a period of ten (10) consecutive years from the time of occupancy of such single family dwelling; provided, however, that the right, title and interest to the parcel herein described shall not revert to the County of Suffolk if:

[a.] the first time home owner or buyer sells to a first time home owner or buyer meeting the income qualifications set forth in paragraph (1.)(b.)[2.], or as amended; and

[b.] any gain realized from such sale up to and including the fifth anniversary of ownership, and declining ratably thereafter to fifty (50%) percent of any realized gain during the sixth year of ownership up to and including the tenth anniversary of ownership, shall be paid to the County of Suffolk; and

[c.] the income qualifications and the formula for recapture of realized gain set forth in this

paragraph shall apply to each and every subsequent sale;

[5.] If all or any portion of the single family residential dwelling is rented or leased to any other person, whether or not by written agreement;

[6.] If the grantee fails to certify to the Suffolk County Director of Affordable Housing, (or his or her designee), prior to closing of the title by a first time home buyer, or occupancy by a first time home owner, as the case may be:

[a.] the dates of completion and occupancy of the single family dwelling constructed on the parcel described herein; and

[b.] the total income, from all sources, of all occupants of the single family dwelling constructed on the parcel described herein; and

[c.] in the case of a first time home buyer, the sales price of the single family dwelling constructed on the parcel described herein; and

[d.] the single family dwelling constructed on the parcel described herein meets all applicable building and zoning codes, rules and regulations;

[7.] If the grantee fails to provide the Suffolk County Director of Affordable Housing, (or his or her designee), with a detailed, annual written report no later than December 31 of each year commencing in the year immediately subsequent to the date of this deed, which report shall include any and all information as may be required by the said Director, including, but not limited to, the status of the development and/or sale of the parcel described herein, and an accounting of all sums directly or indirectly attributable to the use of the parcel described herein."

2.) In the event such highest bidder, after using best efforts to apply for and diligently pursue any variance or other relief from such minimum zoning requirements and a building permit, to allow the construction of a single family residential dwelling on such parcel that substantially conforms in size and appearance to the residential dwellings located within the immediately surrounding residential community, does not obtain such variance and building permit within the time prescribed herein, the auction

sale shall be deemed cancelled and the County shall return to the bidder any sum paid under the terms and conditions of the auction.

3.) In the event a parcel offered for sale pursuant to the preceding provisions of this Subsection is not sold the first time it is offered at an auction, and the parcel is appraised for less than $50,000, the Commissioner, or his or her designee, shall offer the parcel to appropriate adjoining property owners at not less than the appraised value before offering it for sale by general auction.

4.) In the event a parcel does not meet applicable minimum zoning code requirements in order to be developed, is appraised for less than $50,000, and fails to satisfy the criteria for auction under the provisions of this Subsection, the Commissioner, or his or her designee, shall offer the parcel to appropriate adjoining property owners at not less than the appraised value before offering it for sale by general auction.

5.) The Commissioner, or his or her designee, is authorized to execute and deliver, by a bargain and sale deed without covenants, or by quitclaim deed, for the transfer of any properties which are the subject matter of this section. All deed transfers shall be subject to the express approval of the County Legislature, and all contracts negotiated by the County shall provide that the proposed conveyance is subject to legislative approval and subject to such restrictive covenants as may be provided for by law.

17. **PURCHASER IDENTIFICATION** - Prior to closing, the purchaser shall provide information necessary to complete forms and documents required for recording the deed in the Suffolk County Clerk's Office, including, among others as may be requested, the NYS Department of Taxation and Finance TP-584 form.

18. **FORMER OWNER BIDDING RESTRICTED** - The former owner of the property, or his agent, shall not be permitted to bid on the property or purchase same at the public auction, unless his or her bid amount exceeds the total of tax arrears, penalties and interest or surcharges that would have been due as of the day of the auction, without regard to limits on the time to redeem. If the former owner or his agent is the successful bidder at auction all liens existing prior to the foreclosure will be reinstated and added to the auction price.

19. **ASSIGNMENT RESTRICTED** - A Memorandum of Sale executed at the auction cannot be assigned unless the Director agrees thereto in writing. Assignments shall only be approved upon good cause shown. In the event that an assignment is approved, a fee of no less than $300 can be charged.

20. **BROKERS** - The County of Suffolk will not pay any broker's commissions or fees. If a broker or attorney acting in the capacity of a broker is authorized to bid as the designee or agent of the actual purchaser, it is the sole responsibility of the purchaser to pay any brokerage fees or commissions earned thereby.

21. **PARTICIPATION BY SUFFOLK COUNTY EMPLOYEES PROHIBITED** - County employees and/or their immediate families, whether or not residing with the employees, are not permitted to participate as a purchaser or bidder at a County auction. Purchasers will be required to furnish an affidavit at the closing to the effect that the Purchasers are not employees or immediate family members of any Suffolk County Employee.

22. **SALE SUBJECT TO APPROVAL BY LEGISLATURE** - The Suffolk County Code requires that the disposition of surplus property must be approved by the County Legislature. A list of proposed auction sales will be presented to the Legislature for review and approval. All offers to sell are conditioned on approval from the County Legislature which in its sole discretion, can decline to approve.

23. **SALE SUBJECT TO CANCELLATION BY COUNTY** - At the County's discretion, sales remain subject to cancellation even after legislative approval, but prior to the title closing in the event that insurable title cannot be conveyed, or for other good cause as determined to exist by the Director. In the event that a sale is cancelled due to the purchaser's violation of any of the conditions set forth herein, any monies paid by or on behalf of the purchaser to the County shall be forfeited by purchaser and shall be retained by the County.

24. **RISK OF LOSS** - Damage by fire or other casualty loss that occurs between the sale and the title closing, the repair of which exceeds 10% of the purchase price as determined by the Director in his or her sole discretion, may permit the purchaser to cancel the sale. If the damage is less than 10% of the purchase price, the Division of Real Property Acquisition and Management may cancel the sale, or may reduce the purchase price, after verifying the amount and value of damage by an appraisal by up to 10% in order to induce the purchaser to close.

25. **TITLE CLOSINGS** - Closings can be scheduled only after the legislative resolution approving the sale is filed with the County Clerk. The County will use its best efforts to close within six months of this approval. Closing dates for the sale of properties purchased at auction will be determined by the Director. Notice of a closing date will be sent to the purchaser, at least ten (10) calendar days in advance. The County reserves the right, in its sole discretion, to extend the time for closing or to compel the completion of the sale by an action for specific performance. If an adjournment is requested by the purchaser, then the Director may declare the adjourned date, or any subsequent adjourned date to be the final law date set for closing of title. On purchaser's failure to

accept delivery of the deed on the final law date the sale may be cancelled and all monies paid to date may be retained by the County. In such event, purchaser will have no further rights or any claim regarding the sale or the parcel.

26. **METHOD OF PAYMENT** - Except for the auction fee (see below) **cash, certified checks, bank checks, money orders or traveler's checks are the only forms of payment acceptable** for amounts due at auction or closing. At the discretion of the Director, such certified or bank checks, money orders or traveler's checks, if payable to the order of the Purchaser, may be endorsed over to the Division of Real Property Acquisition and Management. The balance of the purchase price together with the pro rata share of taxes for a parcel sold at auction shall be due and payable at the time of the closing of title.

27. **AUCTION FEES** - In addition to the amount of the accepted winning bid, the purchaser of each parcel must pay an auction administrative fee (generally 1%, or up to 3% of the sales price), but not less than $25, if auction fees are required for the subject auction. The auction fee is separate and apart from the purchase price and must be paid by separate check or cash. Payment of the auction fee may be made by any of the methods mentioned in the immediately prior section or by personal check. There will be a $25 fee imposed as an additional closing cost for checks that are not collectible after one presentation to the bank. Auction fees offset the costs of advertising, printing and other expenses of this auction and may be increased or decreased as appropriate to the auction, but may not exceed 3% of the winning bid without approval of the County Legislature.

Additionally in accordance with Local Law No. 40-2007, a local law to offset the cost of maintaining surplus County Property, there shall be imposed on the purchase of all surplus County property sold at public auction a surcharge for each parcel purchased, in addition to any other fees and/or surcharges imposed, which surcharge shall be collected at closing and in accordance with the Auction Terms and Conditions promulgated by the County Division of Real Property Acquisition and Management, and which surcharge shall be deposited with the Suffolk County Sheriff for the sole purpose of funding the Sheriff's Labor Assistance Program (SLAP) or any successor program thereto. This surcharge shall be collected according to the following schedule:

A) a .5% surcharge on winning bids between $0 and $50,000;

B) a .75% surcharge on winning bids between $50,001 and $100,000; an

C) a 1% surcharge on winning bids between $100,001 and $250,000, said surcharge to be applied only to the first $250,000 for winning bids exceeding that amount.

28. **DEFAULT BY THE PURCHASER** - If, due to failure on the part of the purchaser, title does not close on any auctioned parcel, the down payment and auction fee are subject to forfeiture as liquidated damages for the County's auction costs, overhead expenses and loss of the transaction. *In the event of a default on one parcel, the Defaulting Purchaser may not be permitted to close on any other parcels for which he or she is the successful bidder.* If the purchaser fails to pay the balance of the purchase price as herein required, the deposit and auction fee shall be forfeited.

29. **UPSET PRICE** - Bidding will begin at the upset price as specified in the Auction Brochure.

30. **BIDDING INCREMENTS** - During the auction, the auctioneer will announce the minimum increments required to advance bidding. A bid will not be accepted unless it meets or exceeds the increment then in effect. The Director may modify the Bidding Increments at any time without notice. Generally, increments will increase as a multiple of each $20,000 that the sale price increases.

Typical increments are as follows:

Bid Amount (Range)	*Minimum Increment of Subsequent Bid*
$ 5,000 to $ 25,000	$ 500
$25,000 to $ 50,000	$1,000
$50,000 to $100,000	$2,000

31. **OCCUPANCY PRIOR TO CLOSING** - After the close of the Auction, the purchaser of any parcel may contact the Division of Real Property Acquisition and Management to attempt to arrange for a license agreement that would permit inspection or use and occupancy of the auctioned parcel prior to closing. A license agreement may be approved at the discretion of the Director, on such terms as the Director may deem reasonable. No entry onto the auctioned property is permitted without a license agreement.

32. **PERSONAL PROPERTY** - No personal property is included in the sale of any of the parcels auctioned by Suffolk County, except as may remain on the premises after the closing. The disposition of any personal property, located on any parcel following the closing shall be the responsibility of the purchaser.

33. **DEED FORMAT** - The Auction Brochure will set forth the type of deed approved by the legislature for conveyance of each parcel to the winning bidder. One of three types of deeds may be employed:

a) Bargain and Sale Deed without Covenants, or with Covenants against Grantor's Acts;

b) Quitclaim Deed;

c) Directed Deed (from the Treasurer to the Purchaser.)

34. **QUITCLAIM DEED** - A quitclaim deed issued to convey a parcel sold at auction may contain the following provisions:

"Nothing contained in any description herein is intended to convey more than the assessed owner owned at the time of the levy of the tax, the non-payment of which resulted in the tax sale. There is no representation as to the extent of the acreage conveyed herein";

"Excepting and reserving all the right, title and interest of the County of Suffolk in and to any portion or interest of the lands herein conveyed, which interest was heretofore acquired other than pursuant to the provisions of the Real Property Tax Law of the State of New York".

35. **OTHER DEED/CLOSING CONDITIONS** - If an auctioned parcel is contiguous with other real property owned by the Purchaser, the County may require as a condition of closing that Purchaser request the Town Assessor in writing to combine the two parcels; Purchaser shall not convey either parcel(s) without also conveying the adjoining parcel to the same grantee, unless approved by the local planning board. These restrictions shall run with the land.

36. **CLOSING COSTS** - The Purchaser is responsible to pay all closing costs, unless specific provision was otherwise made in advance and approved by the County Legislature. All closings will take place at the Division of Real Property Acquisition and Management, or the Department of Law, unless otherwise agreed to in writing no less than one week in advance of the closing. If the Purchaser demands a closing in Suffolk County other than at County offices, an attendance fee will be charged at the rate of $250 Base Fee for the first two hours, excluding travel time, plus $150 for every hour, or fraction thereof, thereafter. For closings in Nassau County, the Base Fee will be $350; in New York City or the boroughs thereof, the Base Fee is $450.

37. **TITLE INSURANCE** - All objections to title (including survey objections) must be submitted to the Director within 45 days after the date the sale is approved by the County Legislature or the objections are deemed to be waived. In the instance of a Bargain and Sale Deed without Covenants against Grantor's Acts, or a Bargain and Sale Deed with Covenants against Grantor's Acts, the County may , but is not obligated to, deliver such title as a title company licensed in the State of New York and approved to

do business with the County will insure. The County may pre-qualify certain parcels for title insurance. Where it is noted in the brochure that certain parcels have already been examined by a named title company; the Purchaser may choose to use that title company or a different qualifying company.

38. **TITLE OBJECTIONS** - If the purchaser's title company refuses to insure without exceptions, the County may select a different, equally-qualified title company. Purchaser agrees to accept insurance from the alternative insurer, provided no additional cost results thereby, over and above the cost of insurance from the first company. If the purchaser's title company will not insure title without exceptions, and if the Director chooses not to pursue insurance from an alternative title insurer, the Director may cancel the transaction and return the down payment and auction fee. In such event, the parties will have no further rights one against the other.

39. **DISPUTE RESOLUTION FINAL** - The decision of the Director regarding any dispute related to the auction or the conveyance of auctioned property is final. The Director reserves the right to reject any bid for failure to comply with auction procedures, or for any other reason related to the conduct of the auction, or to cancel an approved sale if the County elects not to proceed or if the purchaser fails to complete his or her obligations in timely fashion.

40. **FORM OF COMMUNICATION** - In connection with a "limited auction", that is, an auction among persons owning property adjacent to the parcel to be sold pursuant to §A42-4(H)(3) or (4), the County will send an "Initial Inquiry Response" to solicit the interest of each such owner in participating in an auction. The form is sent to the owner at the address listed with the County Treasurer by certified mail, return receipt requested. All subsequent communications or notices may be sent by regular mail. For publicly advertised auctions, all communications with prospective participants or with purchasers will be sent be regular mail to the address that they provide.

41. **NO WARRANTY OF VACANCY** - The County makes no warranty that the premises will be delivered vacant. If an auctioned property becomes occupied following the sale, then following closing and recording of the deed, an eviction, if necessary, will be the responsibility of the Purchaser. The County expects not to place a licensee, other than the prospective purchaser, in any auctioned premises after the auction. However, it will do so in order to safeguard the premises or for other property management reasons.

42. **PERMISSION TO REMOVE SIGN** - The purchaser on each auction parcel may remove the auction sign after signing the Memorandum of Sale and tendering the down payment.

43. **INELIGIBILITY TO PURCHASE** No bidder, or purchaser/principal in the event of third party bidding, including, without limitation, any business entity or subsidiary, parent or

affiliate thereof, or any trustee(s), director(s), officer(s) or shareholder(s) with voting interests or owning a total of twenty percent (20%) or more of any of the foregoing, who or which is or has been in default in or on any contract, obligation or agreement of any kind or nature whatsoever entered into with the County, or any of its agencies, within a period of five (5) years prior to the date of the auction sale, will be accepted as an eligible bidder for any property. Such obligations include, among other things, the obligation to pay in full all Suffolk County property taxes and charges when due. If the purchaser owns, alone or with others, any other property for which outstanding and delinquent taxes are owed to Suffolk County, those delinquent taxes must be paid in full prior to closing on any parcels purchased at auction.

The County reserves the right to deny access to the auction, cancel a sale or exercise its right of reversion herein, if an investigation reveals to the Director's satisfaction that the registration form is not adequately, properly and/or truthfully completed; if the identification supplied is not sufficient, if the purchaser or bidder is deemed to be financially unqualified; if the purchaser or bidder has been found guilty of any housing code or building code violation which violation resulted in death or personal injury or has been found guilty of any crime or violation under any Federal, State, County, including but not limited to Articles 7 and 12 of the Suffolk County Sanitary Code, Local Law or permit involving the treatment, handling, storage and/or disposal of any toxic and/or hazardous substance, material or waste; or has been found guilty of any predatory and/ or discriminatory lending practices involving, but not limited to, violations of the Racketeer Influenced and Corrupt Organization Act, the Equal Credit Opportunity Act, the Federal Fair Housing Act, the Real Estate Settlement Procedures Act, the Federal Truth in Lending Act, the N.Y. General Business Law or the Suffolk County Human Rights Law or if the taking of title and/or occupancy by purchaser will result in a violation of any Federal, State, County or Local Law.

44. **FINAL SALE** – Except as provided in paragraph 45 hereinafter, all sales shall be final, absolute and without recourse once title has closed and the deed has been recorded. In no event, shall Suffolk County be or become liable for any defects in title for any cause whatsoever; no claim, demand or suit of any nature shall exist against Suffolk County in favor of the purchaser, its heirs, success or assigns, arising from this sale.

45. **MATERIAL MISREPRESENTATION** – If any material misrepresentation, omission or false statement relating to any representation required herein is discovered after the title closing, the County may avail itself of all remedies available to it at law, it being acknowledged that these representations are being relied upon by the County and are material to this transaction. If such misrepresentation, omission or false statement occurs, the purchaser understands that he/she/it may be charged with fraud, and/or intent to defraud. In addition, in such event, the County reserves the right to pursue the purchaser and others for cancellation of the transaction. This clause shall survive the title closing. The verified registration statement is a sworn statement and the making of a false representation or intentional omission in it may be punishable as a crime.

46. **CERTIFICATION OF NON-AGENCY** – The purchaser shall be required to certify that he/she is not representing the former owner(s) of the property and has no intent to defraud Suffolk County of the unpaid taxes, assessment, penalties and charges, which have been levied against the property. The purchaser agrees that neither he/she nor his/her assigns shall convey the property to the former owner(s) against whom Suffolk County foreclosed. If such conveyance occurs, the purchaser understands that he/she may be charged with fraud, and/or intent to defraud. In addition, in such event, the County reserves the right to pursue the purchaser, the former owner and others for cancellation of the transaction, and/or any deficiency between the purchase price at auction and such sums as may be owed to Suffolk County as related to the property.

47. **JURISDICTION** – Bidder and/or purchaser at this auction agrees that the sole forum for any dispute or cause of action arising out of this auction shall be the Supreme Court of the State of New York, County of Suffolk and related Appellate Courts.

STATEMENT OF FINANCIAL IMPACT
OF PROPOSED SUFFOLK COUNTY LEGISLATION

1. Type of Legislation

   Resolution _X_ Local Law _X_ Charter Law _____

2. Title of Proposed Legislation- Approval of Auction Rules for the Disposition of Surplus Property Acquired Under the Suffolk County Tax Act.

3. Purpose of Proposed Legislation

   Annual approval of Auction Rules

4. Will the Proposed Legislation have a fiscal impact? Yes _X_ No _____

5. If the answer to Item 4 is "yes", on what will it impact?

   _X_County _____Town _____Economic Impact

   _____Village _____School District Other (Specify):

   _____Library District _____Fire District

6. If the answer to item 4 is "yes", Provide detailed explanation of Impact

   Auction revenues

7. Total Financial Cost of Funding over 5 years on each affected Political or other subdivision

   Unknown

8. Proposed Source of Funding

   Unknown

9. Timing of Impact

   2014/2015

10. Name & Title of Preparer | Signature of Preparer | Date

    Wayne R. Thompson,
    Real Property Manager
    NE 12 T00 MB

    Wayne R. Thompson

    6/2/14

FINANCIAL IMPACT
2014 PROPERTY TAX LEVY
COST TO THE AVERAGE TAXPAYER

GENERAL FUND

	2014 PROPERTY TAX LEVY	2014 COST TO AVG TAXPAYER	2014 FEV TAX RATE PER $1000
TOTAL		$0.00	$0.000

POLICE DISTRICT AND DISTRICT COURT

	2014 PROPERTY TAX LEVY	2014 COST TO AVG TAXPAYER	2014 FEV TAX RATE PER $1000
TOTAL		$0.00	$0.000

COMBINED

	2014 PROPERTY TAX LEVY	2014 COST TO AVG TAXPAYER	2014 FEV TAX RATE PER $1000
TOTAL		$0.00	$0.000

NOTES:
1) SOURCE FOR NUMBER OF FAMILY PARCELS AND CORRESPONDING ASSESSED VALUATION: SUFFOLK COUNTY REAL PROPERTY, SEPTEMBER 2012.
2) SOURCE FOR TOTAL TAXABLE ASSESSED VALUATION FOR COUNTY PURPOSES: SCHEDULE A, REPORT OF ASSESSED VALUATION FOR 2012-2013.
3) SOURCE FOR EQUALIZATION RATES: TENTATIVE 2012 COUNTY EQUALIZATION RATES ESTABLISHED BY THE NEW YORK STATE BOARD OF EQUALIZATION AND ASSESSMENTS.

To be completed by the Executive Budget Office

2014 INTRAGOVERNMENTAL RELATIONS
MEMORANDUM OF SUPPORT

TITLE OF BILL:

APPROVAL OF AUCTION RULES FOR THE DISPOSITION OF SURPLUS PROPERTY ACQUIRED UNDER THE SUFFOLK COUNTY TAX ACT

PURPOSE OR GENERAL IDEA OF BILL: Yearly approval of Suffolk County Auction Rules.

SUMMARY OF SPECIFIC PROVISIONS: No additions or deletions from 2013 approved auction rules.

JUSTIFICATION: **WHEREAS**, §1070-6 requires the approval by the Suffolk County Legislature of auction rules and regulations formulated by the Department of Economic Development and Planning, Division of Real Property Acquisition and Management.

FISCAL IMPLICATIONS: Dependent on the number of auction parcels sold - will effect mostly 2015

COUNTY OF SUFFOLK

Steven Bellone
SUFFOLK COUNTY EXECUTIVE

Department of
Economic Development and Planning

Joanne Minieri
Deputy County Executive and Commissioner

Division of Real Property
Acquisition and Management

June 2, 2014

✓ Jon Schneider
Deputy County Executive
H. Lee Dennison Bldg. 12th Floor
100 Veterans Memorial Highway
P.O. Box 6100
Hauppauge, New York 11788-0099

Re: RESOLUTION -2014, APPROVAL OF AUCTION RULES FOR THE DISPOSITION OF SURPLUS PROPERTY ACQUIRED UNDER THE SUFFOLK COUNTY TAX ACT

Dear Mr. Schneider:

Enclosed herewith for your approval is the original of the proposed resolution with documentation pursuant to:

Yearly Approval of Auction Rules.
Please note changes in rules- additions are underlined and deletions in [ ]

I would appreciate your placing this on the legislative agenda.

Very truly yours,

Wayne R. Thompson
Division of Real Property
Acquisition and Management

WRT:sc

cc: Dennis M. Cohen, Chief Deputy County Executive (1 hard copy)
Lisa Santeramo, Assistant Deputy County Executive (1 hard copy)
Tom Vaughn, Director of Intragovernmental Relations (1hard copy)
CE RESO REVIEW (electronic copy)

RESOLUTION NO. CONTROL#966-2014

Intro. Res. # 1602-14 Laid on Table 6/17/14

INTRODUCED BY PRESIDING OFFICER
ON REQUEST OF THE COUNTY EXECUTIVE

RESOLUTION NO. _____2014
TO READJUST, COMPROMISE, AND GRANT
REFUNDS AND CHARGE-BACKS ON REAL
PROPERTY CORRECTION OF ERRORS BY:
COUNTY LEGISLATURE (CONTROL #966-2014)

WHEREAS, the Director of the Real Property Tax Service Agency, under appropriate sections of the Real Property Tax Law, will cause to have investigated and a determination made as to whether those submitted "Correction of Error" items which would amend the assessment and tax rolls shall be recommended for approval (or recommended for denial) to the Suffolk County Legislature, and

WHEREAS, the County Legislature of the County of Suffolk may cancel assessments, grant refunds of taxes in case of correction of errors on the assessment and tax rolls, and pursuant to the provisions of the Real Property Tax Law, and

WHEREAS, the properties represented by the tax item number and/or Suffolk County tax map number and indicated below have been duly investigated by the Real Property Tax Service Agency, and the procedures of the Real Property Tax Law having been fully complied with, together with documentation and amended tax statements placed on file with the County, as submitted by the appropriate Assessor and/or Receiver of Taxes, then

1. BE IT RESOLVED, that the taxes for the properties represented by the tax item number and/or Suffolk County Tax Map Number, as shown, for the year or year specified be readjusted or refunded in full or part in the amount set opposite each such parcel as herein indicated, and

2. BE IT FURTHER RESOLVED, that the amount of such refund, if tax paid or charge-back, be made to the respective TOWN as provided by law.

RESOLUTION NO. CONTROL#966-2014

KEY	EXPLANATION	RPTL SEC	LIMITATIONS
A	Clerical Error	556	3 years
B	Unlawful Entry	556	3 years
C	Error in Essential Fact	556a	3 years

RESOLUTION NO. CONTROL#966-2014

(A/B - Chapter 634 Laws 1976) (C - Chapter 124 Laws 1975)

Key	Town	Year	S.C. Tax Map No	Original Tax	Corrected Tax	Chargeback Refund, if Tax Paid
A	BROOKHAVEN	13/14	0200 84200 0300 071006	7935.20	4974.94	2960.26
A	BROOKHAVEN	13/14	0200 54600 0300 040000	11598.96	7854.21	3744.75
A	BROOKHAVEN	13/14	0200 22000 0200 001000	17107.22	14241.01	2866.21
A	BROOKHAVEN	13/14	0200 14800 0300 038000	8270.84	4432.85	3837.99
A	BROOKHAVEN	13/14	0200 17000 0400 015000	5997.17	1740.40	4256.77
A	BROOKHAVEN	13/14	0209 01400 0100 019001	16145.23	12835.67	3309.56
C	ISLIP	13/14	0500 37600 0500 016000	20792.04	13371.26	7420.78
C	ISLIP	13/14	0500 23100 0100 049000	10297.41	6127.64	4169.77
C	ISLIP	12/13	0500 23100 0100 049000	8281.21	4366.38	3914.83

As Provided and Requested By Town Assessor or Receiver of Taxes
APPROVED BY:

County Executive of Suffolk County Date of Approval:

1602

STATEMENT OF FINANCIAL IMPACT
OF PROPOSED SUFFOLK COUNTY LEGISLATION

1. Type of Legislation

Resolution X Local Law Charter Law

2. Title of Proposed Legislation

TO READJUST, COMPROMISE, AND GRANT REFUNDS AND CHARGE-BACKS ON REAL PROPERTY CORRECTION OF ERRORS

3. Purpose of Proposed Legislation Yes ____ No____

SEE NO. 2 ABOVE

4. Will the Proposed Legislation Have a Fiscal Impact? Yes No X

5. If the answer to item 4 is "yes," on what will it impact? (circle appropriate category)

County Town Economic Impact

Village School District Other (Specify):

Library District Fire District

6. If the answer to item 5 is "yes," Provide Detailed Explanation of Impact

N/A

7. Total Financial Cost of Funding over 5 Years on Each Affected Political or Other Subdivision.

N/A

8. Proposed Source of Funding

N/A

9. Timing of Impact

2014

10. Typed Name & Title of Preparer R. Motschenbacher RPAT II

11. Signature of Preparer

12. Date June 3, 2014

1603

Intro. Res. No. -2014 Laid on Table 6/17/14

Introduced by Presiding Officer on request of the County Executive

RESOLUTION NO. –2014, ACCEPTING THE DONATION OF A ROAD WARRIOR SPEED/LPR TRAILER FROM NDI RECOGNITION SYSTEMS FOR USE BY THE SUFFOLK COUNTY POLICE DEPARTMENT

WHEREAS, NDI Recognition Systems wishes to donate a Road Warrior Speed/License Plate Reader trailer to the Suffolk County Police Department; and

WHEREAS, the Road Warrior Speed/LPR trailer will be a useful patrol and investigative tool; and

WHEREAS, the Suffolk County Police Department already utilizes similar equipment; and

WHEREAS, the unconditional gift comes at no additional cost to the County; now, therefore be it

1st **RESOLVED**, that the donation of a Road Warrior Speed/LPR trailer with a value of approximately $36,000.00 for use by the Suffolk County Police Department is hereby accepted.

2nd **RESOLVED**, that this Legislature, being the State Environmental Quality Review Act ("SEQRA") lead agency, hereby finds and determines that this resolution constitutes a Type II action, pursuant to Section 617.5 (c) (20), (21) and (27) of Title 6 of the New York Code of Rules and Regulations ("NYCRR"), and within the meaning of Section 8-0109(2) of the New York Environmental Conservation Law as a promulgation of regulations, rules, policies, procedures, and legislative collection, and the Suffolk County Council on Environmental Quality (CEQ) is hereby directed to circulate any appropriate SEQRA notices of determination of non-applicability or non-significance in accordance with this resolution; and further be

DATED: , 2014

APPROVED BY:

_____

County Executive of Suffolk County

Date of Approval:

1603

STATEMENT OF FINANCIAL IMPACT
OF PROPOSED SUFFOLK COUNTY LEGISLATION

1. Type of Legislation

Resolution XX Local Law ____ Charter Law

2. Title of Proposed Legislation

ACCEPTING THE DONATION OF A ROAD WARRIOR SPEED/LPR TRAILER FROM NDI RECOGNITION SYSTEMS FOR USE BY THE SUFFOLK COUNTY POLICE DEPARTMENT

3. Purpose of Proposed Legislation

SEE NO. 2 ABOVE

4. Will the Proposed Legislation Have a Fiscal Impact? **Yes XX No**

5. If the answer to item 4 is "yes", on what will it impact? (circle appropriate category)

County **Town** **Economic Impact**

Village **School District** **Other (Specify):**

Library District **Fire District**

6. If the answer to item 5 is "yes", Provide Detailed Explanation of Impact

This resolution accepts the donation of Road Warrior Speed Trailer.

7. Total Financial Cost of Funding over 5 Years on Each Affected Political or Other Subdivision.

Unknown/maintenance

8. Proposed Source of Funding

County Operating Budget

9. Timing of Impact

Effective upon adoption.

10. Typed Name & Title of Preparer	11. Signature of Preparer	12. Date
Tricia Saunders, Principal Research Analyst		6-10-14

FINANCIAL IMPACT
2014 PROPERTY TAX LEVY
COST TO THE AVERAGE TAXPAYER

1603

GENERAL FUND

	2014 PROPERTY TAX LEVY	2014 COST TO AVG TAXPAYER	2014 AV TAX RATE PER $100	2014 FEV TAX RATE PER $1000
TOTAL	$0	**$0.00**		$0.000

POLICE DISTRICT AND DISTRICT COURT

	2014 PROPERTY TAX LEVY	2014 COST TO AVG TAXPAYER	2013 AV TAX RATE PER $100	2014 FEV TAX RATE PER $1000
TOTAL	$0	**$0.00**		$0.000

COMBINED

	2014 PROPERTY TAX LEVY	2014 COST TO AVG TAXPAYER	2014 AV TAX RATE PER $100	2014 FEV TAX RATE PER $1000
TOTAL	$0	**$0.00**		$0.000

NOTES:
1) SOURCE FOR NUMBER OF FAMILY PARCELS AND CORRESPONDING ASSESSED VALUATION: SUFFOLK COUNTY REAL PROPERTY, 2013.
2) SOURCE FOR TOTAL TAXABLE ASSESSED VALUATION FOR COUNTY PURPOSES: SCHEDULE A, REPORT OF ASSESSED VALUATION FOR 2013-2014.
3) SOURCE FOR EQUALIZATION RATES: 2013 COUNTY EQUALIZATION RATES ESTABLISHED BY THE NEW YORK STATE BOARD OF EQUALIZATION AND ASSESSMENTS.

To be completed by the Executive Budget Office

1603

NDI RECOGNITION SYSTEMS

10/29/2013

Officer Paul Salas
Suffolk County Police
John L. Barry Police Headquarters
30 Yaphank Avenue
Yaphank, NY 11980

On October 22, 2013 at the International Association of Chief of Police (IACP) Conference in Philadelphia Pennsylvania . NDI Recognition Systems, a Florida based License Plate Recognition (LPR) manufacturer held a drawing open to all attending Law Enforcement Agencies to win an NDI Recognition Systems "RoadWarrior" radar trailer with LPR.

The drawing was conducted to promote interest in NDI-RS LPR products and technology. Suffolk County Police Officer Paul Salas entered his agency in the draw and won the RoadWarrior Speed / LPR trailer. The award of the RoadWarrior valued at $36k (including back office software) is a gift by NDI-RS to the Suffolk County Police as the winner with no conditions attached.

The normal NDI-RS one year warranty providing any needed maintenance and support is included. NDI-RS will ship the trailer to Suffolk County, setup the trailer and provide training in its use.

We would be delighted for Suffolk County Police Department to accept the prize.

Many congratulations.

Sincerely,

Alan A Quinn
President & CEO

NDI Technologies Inc. 385 Commerce Way, Longwood FL. 32750
Tel +1 321 441 1800 | Fax +1 321 441 1801 www.nditech.net

Road Warrior

Portable ALPR System

Serious about ALPR. Serious about Service.

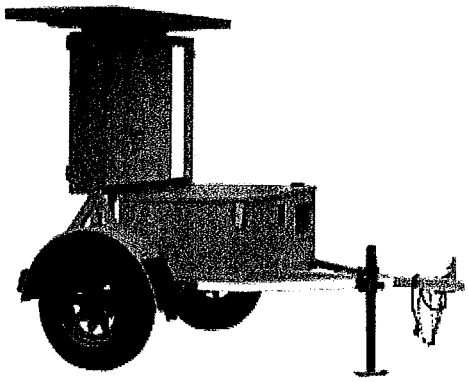

ALPR Anywhere

1603

Mobile Automated License Plate Recognition

Road Warrior is an ultra-mobile configuration of VeriPlate, the most advanced automatic license plate recognition solution available today. The Road Warrior system is a cost-effective standard radar speed trailer with an 18" speed-only display, and can be deployed quickly and efficiently, without alerting passing traffic. In addition to being a fully functional speed trailer, the Road Warrior houses a complete ALPR system which runs efficiently and covertly in tandem with the radar speed system. The Road Warrior is ideal for checkpoint operations and other temporary ALPR requirements.

The Road Warrior system captures all license plate image data, reads it, and wirelessly alerts a variety of assets, including patrol vehicles, covert undercover vehicles, and handheld devices. Data is also transmitted to the Vehicle Intelligence Server and Communications Engine (VISCE™) database at headquarters where full historic search, pre- and post-incident analysis, and geo fencing applications are available. The system is powered by heavy-duty deep-cell batteries augmented by solar panels. Under optimum conditions, the trailer can run up to seven days without recharging. Additional batteries can be added to extend the trailer's battery life.

Key Features:

- Infra-red and color cameras for day and night operation
- Battery power augmented by solar panel
- Reads up to 3600 tags per hour
- Secure wireless transmission allowing remote monitoring and alarms (user specifies wireless carrier)
- 18" speed display, with three static speed signs (25, 35, and 45 mph)
- Full radar system with overspeed flashing

System includes:

- V220 mobile ALPR camera
- VP series processor
- VeriPlate mobile ALPR software
- VISCE Back Office software
- Wireless modem and GPS

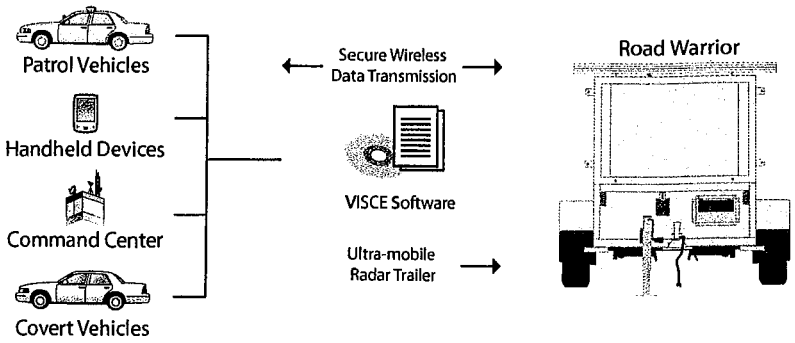

NDI Recognition Systems
385 Commerce Way
Longwood, FL 32750-5157
Tel: 866-458-0426 Fax: 321-441-1801
Web: www.ndi-rs.com Email: sales@ndi-rs.net

NDI RECOGNITION SYSTEMS

NDI Recognition Systems
9700 Research Drive Suite 136
Charlotte, NC 28262
Tel: 866-458-0426 Fax: 321-441-1801
Web: www.ndi-rs.com Email: sales@ndi-rs.net

Road Warrior

Portable ALPR System

Serious about ALPR. Serious about Service.

Road Warrior

Specifications

Length	94" (7' 10") 239 cm (2.4 m)
Height	67" (5' 7") 170 cm (1.7 m)
Width	67" (5' 7") 170 cm (1.7 m)
Weight	908 Lbs (412 Kg)
Rims	14" (36 cm)

1603

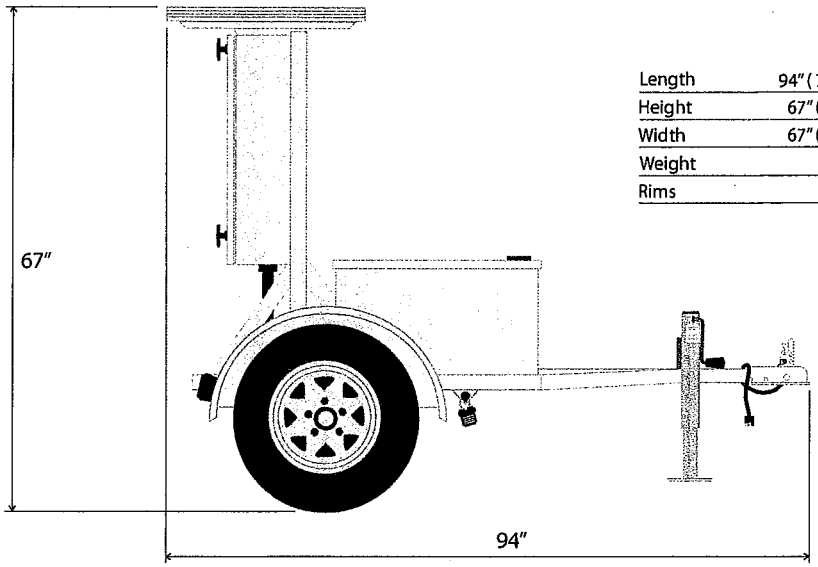

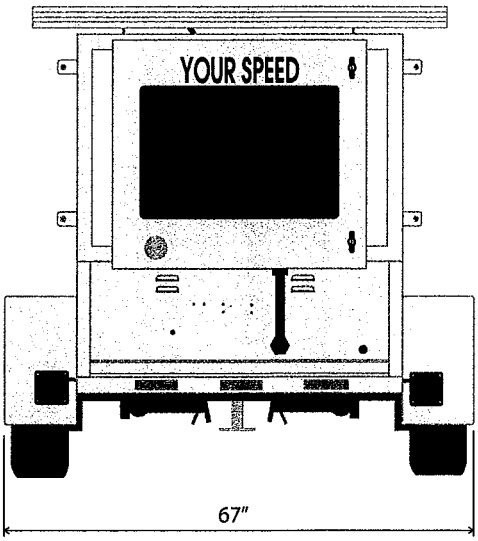

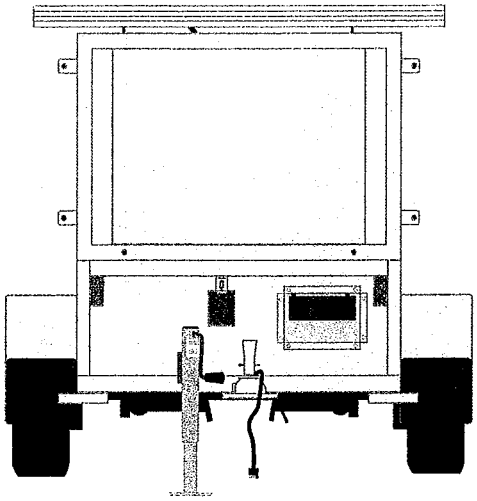

NDI reserves the right to update or change products at any time without prior notice. VeriPlate, is registered trademarks of NDI Recognition Systems. All other trademarks or registered trademarks are property of their respective owners.

© 2013 NDI Recognition Systems. RW-050813

NDI Recognition Systems
385 Commerce Way
Longwood, FL 32750-5157
Tel: 866-458-0426 Fax: 321-441-1801
Web: www.ndi-rs.com Email: sales@ndi-rs.net

ndirs
NDI RECOGNITION SYSTEMS

NDI Recognition Systems
9700 Research Drive Suite 136
Charlotte, NC 28262
Tel: 866-458-0426 Fax: 321-441-1801
Web: www.ndi-rs.com Email: sales@ndi-rs.net

2014 INTERGOVERNMENTAL RELATIONS
MEMORANDUM OF SUPPORT

1603

Title of Bill: Accepting the donation of a Road Warrior speed/lpr trailer from NDI Recognition Systems for use by the Suffolk County Police Department

PURPOSE OR GENERAL IDEA OF BILL: To accept the unconditional gift of a speed/license plate reader trailer.

SUMMARY OF SPECIFIC PROVISIONS: The Suffolk County Police Department already utilizes similar equipment. The Road Warrior speed/lpr trailer will be a useful patrol and investigative tool.

JUSTIFICATION: There is no cost to the County.

COUNTY OF SUFFOLK

1603

STEVEN BELLONE
COUNTY EXECUTIVE

EDWARD WEBBER
POLICE COMMISSIONER

POLICE DEPARTMENT

June 2, 2014

Office of the County Executive
H. Lee Dennison Building
100 Veterans Memorial Highway
Hauppauge, NY 11788

Attn.: Jonathan Schneider,
Deputy County Executive

Re: Legislative Proposal / Acceptance of Donation of RoadWarrior Radar Speed / Lic. Plate Reader

Dear Mr. Schneider:

I respectfully request that the County Executive propose the attached legislative resolution accepting, on behalf of the Police Department, the donation of a RoadWarrior Radar Speed / License Plate Reader from the manufacturer, NDI Recognition Systems. The proposed donation will not incur any cost to the County.

Enclosed is a Request for the Introduction of Suffolk County Legislation (SCIN 175a) along with the proposed Resolution and Fiscal Impact Statement (SCIN 175b). An email version of the resolution was forwarded on this date to CE RESO REVIEW under the title, Reso-SCPD-Acceptance of Unconditional Gift of License Plate Reader Trailer.

Thank you for your assistance and consideration in this matter.

Very truly yours,

Edward Webber
Police Commissioner

cc: Dennis M. Cohen, Chief Deputy County Executive
Lisa Santeramo, Assistant Deputy County Executive
Tom Vaughn, Director of Intergovernmental Relations

Intro. Res. No. 1604-14 Laid on the Table 6/17/14
Introduced by Presiding Officer on Request of the County Executive

RESOLUTION NO. –2014, AMENDING THE 2014 OPERATING BUDGET AND APPROPRIATING FUNDS IN CONNECTION WITH BONDING FOR A SETTLEMENT FOR A LIABILITY CASE AGAINST THE COUNTY

WHEREAS, the Ways and Means Committee has approved a settlement for a negligence action against the County for the amount of Two Million Two Hundred Fifty Thousand ($2,250,000) Dollars; and

WHEREAS, the above settlement is a mandated expense that must be paid by the County; and

WHEREAS, sufficient funds to satisfy lawsuits, orders, judgments and settlements are not available in the 2014 Operating Budget; and

WHEREAS, the County Legislature, by Resolution of even date herewith, has authorized the issuance of Two Million Two Hundred Fifty Thousand ($2,250,000) Dollars in Suffolk County Serial Bonds to cover the cost of the above referenced settlement; now, therefore be it

1st RESOLVED, that the settlement for the total sum of Two Million Two Hundred Fifty Thousand ($2,250,000) Dollars be bonded and paid under the authority of the Office of Risk Management, County Department of Law, in conjunction with the County Department of Audit and Control and the County Executive's Budget Office; and be it further

2nd RESOLVED, that the proceeds of Two Million Two Hundred Fifty Thousand ($2,250,000) Dollars in Suffolk County Serial Bonds be and are hereby appropriated as follows:

REVENUES:
038-2780 Proceeds: Debt $2,250,000

APPROPRIATIONS: Miscellaneous
General Liability Insurance
038-MSC-1914
Mandated

8505 – Settlements $2,250,000

DATED:

APPROVED BY:

_____
County Executive of the County of Suffolk

Date of Approval:

COUNTY OF SUFFOLK

16011

STEVEN BELLONE
SUFFOLK COUNTY EXECUTIVE

DENNIS M. BROWN
COUNTY ATTORNEY

DEPARTMENT OF LAW
DIVISION OF RISK MANAGEMENT

TO: Jon Schneider
Deputy County Executive

FROM: Dennis M. Brown
County Attorney

DATE: June 4, 2014

RE: Bond Resolution

Enclosed you will find a draft of a resolution for bonding $2,250,000 for the settlement of a general liability case. The settlement was approved by the Ways and Means committee. Payment must be made within 90 days of receipt closing papers. This memo is to request the processing of the resolution.

Should you require any additional information, please do not hesitate to contact me.

Cc: Tom Vaughn
Lisa Santeramo

LOCATION:
H. LEE DENNISON BLDG. – 7TH FLOOR

MAILING ADDRESS:
P.O. BOX 6100

Liability (631) 853-4700
Risk Mgmt. & Liability Fax (631) 853-4956

1604

STATEMENT OF FINANCIAL IMPACT
OF PROPOSED SUFFOLK COUNTY LEGISLATION

1. Type of Legislation

Resolution ___X___ Local Law _____ Charter Law _____

2. Title of Proposed Legislation

AMENDING THE 2014 OPERATING BUDGET AND APPROPRIATING FUNDS IN CONNECTION WITH BONDING FOR A SETTLEMENT FOR A LIABILITY CASE AGAINST THE COUNTY

3. Purpose of Proposed Legislation

See above.

4. Will the Proposed Legislation Have a Fiscal Impact? **Yes** __X__ **No** _____

5. If the answer to item 4 is "yes", on what will it impact? (circle appropriate category)

County **Town** **Economic Impact**

Village **School District** **Other (Specify):**

Library District **Fire District**

6. If the answer to item 5 is "yes", Provide Detailed Explanation of Impact

SERIAL BONDS WILL BE ISSUED TO FINANCE THIS SETTLEMENT. PRINCIPAL AND INTEREST COSTS WILL BE INCURRED OVER THE LIFE OF THE BONDS. SEE ATTACHED DEBT SCHEDULE.

7. Total Financial Cost of Funding over 5 Years on Each Affected Political or Other Subdivision.

SEE ATTACHED.

8. Proposed Source of Funding

SERIAL BONDS

9. Timing of Impact

IT IS ANTICIPATED THAT BONDS WILL BE ISSUED FALL 2014 AND DEBT SERVICE WILL COMMENCE FALL 2015. THERE IS NO FISCAL IMPACT IN 2014.

10. Typed Name & Title of Preparer	11. Signature of Preparer	12. Date
Colleen Capece Special Projects Coordinator	CL Capece	June 9, 2014

SCIN FORM 175b (10/95)

FINANCIAL IMPACT
2015 PROPERTY TAX LEVY*
COST TO THE AVERAGE TAXPAYER

1604

GENERAL FUND

	2014 PROPERTY TAX LEVY	2015* COST TO AVG TAXPAYER	2014 AV TAX RATE PER $100	2014 FEV TAX RATE PER $1000
TOTAL	$496,923	$0.95		$0.002

POLICE DISTRICT AND DISTRICT COURT

	2014 PROPERTY TAX LEVY	2015* COST TO AVG TAXPAYER	2014 AV TAX RATE PER $100	2014 FEV TAX RATE PER $1000
TOTAL	$0	$0.00		$0.000

COMBINED

	2014 PROPERTY TAX LEVY	2015* COST TO AVG TAXPAYER	2014 AV TAX RATE PER $100	2014 FEV TAX RATE PER $1000
TOTAL	$496,923	$0.95		$0.002

**** The Estimated 2015 Cost to Average Taxpayer is based upon the 2014 property tax levy and is provided for informational purposes only.***

NOTES:
1) SOURCE FOR NUMBER OF FAMILY PARCELS AND CORRESPONDING ASSESSED VALUATION: SUFFOLK COUNTY REAL PROPERTY, 2013.
2) SOURCE FOR TOTAL TAXABLE ASSESSED VALUATION FOR COUNTY PURPOSES: SCHEDULE A, REPORT OF ASSESSED VALUATION FOR 2013-2014.
3) SOURCE FOR EQUALIZATION RATES: 2013 COUNTY EQUALIZATION RATES ESTABLISHED BY THE NEW YORK STATE BOARD OF EQUALIZATION AND ASSESSMENTS.

To be completed by the Executive Budget Office

Suffolk County

General Obligation Serial Bonds
Level Debt

1604

Term of Bonds	5
Amount to Bond:	$2,250,000

Date	Coupon	Principal	Interest	Total Debt Service	Fiscal Debt Service
5/1/2015					
5/1/2016	3.000%	$420,422.61	$76,500.00	$496,922.61	$496,922.61
			$31,102.82	$31,102.82	
5/1/2017	3.000%	$434,716.98	$31,102.82	$465,819.79	$496,922.61
			$23,712.63	$23,712.63	
5/1/2018	3.000%	$449,497.35	$23,712.63	$473,209.98	$496,922.61
			$16,071.17	$16,071.17	
5/1/2019	4.000%	$464,780.26	$16,071.17	$480,851.44	$496,922.61
			$8,169.91	$8,169.91	
5/1/2020	4.000%	$480,582.79	$8,169.91	$488,752.70	$496,922.61
5/1/2021		$2,250,000.00	$234,613.04	$2,484,613.04	$2,484,613.04

COUNTY OF SUFFOLK

16011

STEVEN BELLONE
SUFFOLK COUNTY EXECUTIVE

DENNIS M. BROWN
COUNTY ATTORNEY

DEPARTMENT OF LAW
DIVISION OF RISK MANAGEMENT

TO: Jon Schneider
Deputy County Executive

FROM: Dennis M. Brown
County Attorney

DATE: June 4, 2014

RE: Bond Resolution

Enclosed you will find a draft of a resolution for bonding $2,250,000 for the settlement of a general liability case. The settlement was approved by the Ways and Means committee. Payment must be made within 90 days of receipt closing papers. This memo is to request the processing of the resolution.

Should you require any additional information, please do not hesitate to contact me.

Cc: Tom Vaughn
Lisa Santeramo

LOCATION:
H. LEE DENNISON BLDG. – 7TH FLOOR

MAILING ADDRESS:
P.O. BOX 6100

Liability **(631) 853-4700**
Risk Mgmt. & Liability Fax **(631) 853-4956**

Intro. Res. No. 1605-14 Laid on the Table 6/17/14
Introduced by Presiding Officer on Request of the County Executive

RESOLUTION NO. –2014, AMENDING THE 2014 OPERATING BUDGET AND APPROPRIATING FUNDS IN CONNECTION WITH BONDING FOR A SETTLEMENT FOR MEDICAL MALPRACTICE CASE AGAINST THE COUNTY

WHEREAS, the Ways and Means Committee has approved a settlement in a medical malpractice matter for the amount of One Hundred and Twenty Five Thousand ($125,000) Dollars; and

WHEREAS, the above settlement is a mandated expense that must be paid by the County; and

WHEREAS, sufficient funds to satisfy lawsuits, orders, judgments and settlements are not available in the 2014 Operating Budget; and

WHEREAS, the County Legislature, by Resolution of even date herewith, has authorized the issuance of One Hundred and Twenty Five Thousand ($125,000) Dollars in Suffolk County Serial Bonds to cover the cost of the above referenced settlement; now, therefore be it

1st RESOLVED, that the settlement for the sum of One Hundred Twenty Five Thousand ($125,000) Dollars be bonded and paid under the authority of the Office of Risk Management, County Department of Law, in conjunction with the County Department of Audit and Control and the County Executive's Budget Office; and be it further

2nd RESOLVED, that the proceeds of One Hundred and Twenty Five Thousand ($125,000) Dollars in Suffolk County Serial Bonds be and are hereby appropriated as follows:

REVENUES:
038-2780 Proceeds: Debt $125,000

APPROPRIATIONS: Miscellaneous
Medical Malpractice Insurance
038-MSC-9090
Mandated

4880 – Settlements $125,000

DATED:

APPROVED BY:

_____
County Executive of the County of Suffolk

Date of Approval:

COUNTY OF SUFFOLK

1605

STEVEN BELLONE
SUFFOLK COUNTY EXECUTIVE

DENNIS M. BROWN
COUNTY ATTORNEY

DEPARTMENT OF LAW
DIVISION OF RISK MANAGEMENT

TO: Jon Schneider
Deputy County Executive

FROM: Dennis M. Brown
County Attorney

DATE: June 6, 2014

RE: Bond Resolution

Enclosed you will find a draft of a resolution for bonding $125,000 for the settlement of a medical malpractice case. The settlement was approved by the Ways and Means committee. Payment must be made within 90 days of receipt closing papers. This memo is to request the processing of the resolution.

Should you require any additional information, please do not hesitate to contact me.

Cc: Tom Vaughn
Lisa Santeramo

LOCATION:
H. LEE DENNISON BLDG. – 7TH FLOOR
VETERANS MEMORIAL HIGHWAY

MAILING ADDRESS:
P.O. BOX 6100
HAUPPAUGE, NY 11788-0099

Liability (631) 853-4700
Risk Mgmt. & Liability Fax (631) 853-4956
Workers Compensation Fax (631) 853-4789

STATEMENT OF FINANCIAL IMPACT
OF PROPOSED SUFFOLK COUNTY LEGISLATION

1605

1. Type of Legislation

Resolution ___X___ Local Law _____ Charter Law _____

2. Title of Proposed Legislation

AMENDING THE 2014 OPERATING BUDGET AND APPROPRIATING FUNDS IN CONNECTION WITH BONDING FOR A SETTLEMENT FOR MEDICAL MALPRACTICE CASE AGAINST THE COUNTY

3. Purpose of Proposed Legislation

See above.

4. Will the Proposed Legislation Have a Fiscal Impact? **Yes** __X__ **No** _____

5. If the answer to item 4 is "yes", on what will it impact? (circle appropriate category)

County	**Town**	**Economic Impact**
Village	**School District**	**Other (Specify):**
Library District	**Fire District**	

6. If the answer to item 5 is "yes", Provide Detailed Explanation of Impact

SERIAL BONDS WILL BE ISSUED TO FINANCE THIS SETTLEMENT. PRINCIPAL AND INTEREST COSTS WILL BE INCURRED OVER THE LIFE OF THE BONDS. SEE ATTACHED DEBT SCHEDULE.

7. Total Financial Cost of Funding over 5 Years on Each Affected Political or Other Subdivision.

SEE ATTACHED.

8. Proposed Source of Funding

SERIAL BONDS

9. Timing of Impact

IT IS ANTICIPATED THAT BONDS WILL BE ISSUED FALL 2014 AND DEBT SERVICE WILL COMMENCE FALL 2015. THERE IS NO FISCAL IMPACT IN 2014.

10. Typed Name & Title of Preparer	11. Signature of Preparer	12. Date
Colleen Capece Special Projects Coordinator	CL Capece	June 10, 2014

SCIN FORM 175b (10/95)

Suffolk County

1605

General Obligation Serial Bonds
Level Debt

Term of Bonds	5
Amount to Bond:	$125,000

Date	Coupon	Principal	Interest	Total Debt Service	Fiscal Debt Service
11/1/2014					
11/1/2015	3.000%	$23,356.81	$4,250.00	$27,606.81	$27,606.81
			$1,727.93	$1,727.93	
11/1/2016	3.000%	$24,150.94	$1,727.93	$25,878.88	$27,606.81
			$1,317.37	$1,317.37	
11/1/2017	3.000%	$24,972.08	$1,317.37	$26,289.44	$27,606.81
			$892.84	$892.84	
11/1/2018	4.000%	$25,821.13	$892.84	$26,713.97	$27,606.81
			$453.88	$453.88	
11/1/2019	4.000%	$26,699.04	$453.88	$27,152.93	$27,606.81
		$125,000.00	$13,034.06	$138,034.06	$138,034.06

FINANCIAL IMPACT
2015 PROPERTY TAX LEVY*
COST TO THE AVERAGE TAXPAYER

1605

GENERAL FUND

	2014 PROPERTY TAX LEVY	2015* COST TO AVG TAXPAYER	2014 AV TAX RATE PER $100	2014 FEV TAX RATE PER $1000
TOTAL	**$27,607**	**$0.05**		$0.000

POLICE DISTRICT AND DISTRICT COURT

	2014 PROPERTY TAX LEVY	2015* COST TO AVG TAXPAYER	2014 AV TAX RATE PER $100	2014 FEV TAX RATE PER $1000
TOTAL	**$0**	**$0.00**		$0.000

COMBINED

	2014 PROPERTY TAX LEVY	2015* COST TO AVG TAXPAYER	2014 AV TAX RATE PER $100	2014 FEV TAX RATE PER $1000
TOTAL	**$27,607**	**$0.05**		$0.000

**** The Estimated 2015 Cost to Average Taxpayer is based upon the 2014 property tax levy and is provided for informational purposes only.***

NOTES:
1) SOURCE FOR NUMBER OF FAMILY PARCELS AND CORRESPONDING ASSESSED VALUATION: SUFFOLK COUNTY REAL PROPERTY, 2013.
2) SOURCE FOR TOTAL TAXABLE ASSESSED VALUATION FOR COUNTY PURPOSES: SCHEDULE A, REPORT OF ASSESSED VALUATION FOR 2013-2014.
3) SOURCE FOR EQUALIZATION RATES: 2013 COUNTY EQUALIZATION RATES ESTABLISHED BY THE NEW YORK STATE BOARD OF EQUALIZATION AND ASSESSMENTS.

To be completed by the Executive Budget Office

Intro. Res. No. 1606-14 Laid on Table 6/17/14
Introduced by Presiding Officer, on request of the County Executive

RESOLUTION NO. _____-2014, ACCEPTING THE DONATION OF A 2007 LEXUS RX350, VEHICLE IDENTIFICATION NUMBER 2T2HK31U07C011141, FROM THE NATIONAL INSURANCE CRIME BUREAU FOR USE BY THE SUFFOLK COUNTY DISTRICT ATTORNEY'S OFFICE

WHEREAS, the National Insurance Crime Bureau wishes to donate a 2007 Lexus RX350, Vehicle Identification Number 2T2HK31U07C011141, to the Suffolk County District Attorney's Office for undercover operations; and

WHEREAS, the 2007 Lexus RX350, Vehicle Identification Number 2T2HK31U07C011141, Is a recovered stolen vehicle now owned by the National Insurance Crime Bureau; and

WHEREAS, the car has been approved for fleeting by the Suffolk County Department of Public Works; and

WHEREAS, the Suffolk County District Attorney's Office is presently below its maximum fleet number by twelve (12) vehicles; and

WHEREAS, the Suffolk County District Attorney's Office has a need for this vehicle and requests that it be added to its fleet for undercover operations; and

WHEREAS, Chapter 255 of the Code of Suffolk County requires that no vehicles shall be purchased or leased unless "explicit approval for the acquisition of such vehicles, via lease or purchase, has been granted by the Suffolk County Legislature"; now, therefore be it

RESOLVED, that the donation of a 2007 Lexus RX350, Vehicle Identification Number 2T2HK31U07C011141, for use by the Suffolk County District Attorney's Office is hereby accepted; and be it further

RESOLVED, that this Legislature, being the State Environmental Quality Review Act ("SEQRA") lead agency, hereby finds and determines that this resolution constitutes a Type II action, pursuant to Section 617.5 (c) (20), (21) and (27) of Title 6 of the New York Code of Rules and Regulations ("NYCRR"), and within the meaning of Section 8-0109(2) of the New York Environmental Conservation Law as a promulgation of regulations, rules, policies, procedures, and legislative collection, and the Suffolk County Council on Environmental Quality (CEQ) is hereby directed to circulate any appropriate SEQRA notices of determination of non-applicability or non-significance in accordance with this resolution.

DATED:

APPROVED BY:

_____
County Executive of Suffolk County

Date:

1606

STATEMENT OF FINANCIAL IMPACT
OF PROPOSED SUFFOLK COUNTY LEGISLATION

1. Type of Legislation

Resolution XX Local Law _____ Charter Law

2. Title of Proposed Legislation

ACCEPTING THE DONATION OF A 2007 LEXUS RX350, VEHICLE IDENTIFICATION NUMBER 2T2HK31U07C011141, FROM THE NATIONAL INSURANCE CRIME BUREAU FOR USE BY THE SUFFOLK COUNTY DISTRICT ATTORNEY'S OFFICE

3. Purpose of Proposed Legislation

SEE NO. 2 ABOVE

4. Will the Proposed Legislation Have a Fiscal Impact? **Yes XX No**

5. If the answer to item 4 is "yes", on what will it impact? (circle appropriate category)

County	**Town**	**Economic Impact**
Village	**School District**	**Other (Specify):**
Library District	**Fire District**	

6. If the answer to item 5 is "yes", Provide Detailed Explanation of Impact

Accepts the donation of a vehicle from the National Insurance Crime Bureau.

7. Total Financial Cost of Funding over 5 Years on Each Affected Political or Other Subdivision.

Unknown/maintenance

8. Proposed Source of Funding

County Operating Budget

9. Timing of Impact

Effective upon adoption.

10. Typed Name & Title of Preparer	11. Signature of Preparer	12. Date
Tricia Saunders, Principal Research Analyst		6-10-14

FINANCIAL IMPACT
2014 PROPERTY TAX LEVY
COST TO THE AVERAGE TAXPAYER

1606

GENERAL FUND

	2014 PROPERTY TAX LEVY	2014 COST TO AVG TAXPAYER	2014 AV TAX RATE PER $100	2014 FEV TAX RATE PER $1000
TOTAL	$0	$0.00		$0.000

POLICE DISTRICT AND DISTRICT COURT

	2014 PROPERTY TAX LEVY	2014 COST TO AVG TAXPAYER	2013 AV TAX RATE PER $100	2014 FEV TAX RATE PER $1000
TOTAL	$0	$0.00		$0.000

COMBINED

	2014 PROPERTY TAX LEVY	2014 COST TO AVG TAXPAYER	2014 AV TAX RATE PER $100	2014 FEV TAX RATE PER $1000
TOTAL	$0	$0.00		$0.000

NOTES:
1) SOURCE FOR NUMBER OF FAMILY PARCELS AND CORRESPONDING ASSESSED VALUATION: SUFFOLK COUNTY REAL PROPERTY, 2013.
2) SOURCE FOR TOTAL TAXABLE ASSESSED VALUATION FOR COUNTY PURPOSES: SCHEDULE A, REPORT OF ASSESSED VALUATION FOR 2013-2014.
3) SOURCE FOR EQUALIZATION RATES: 2013 COUNTY EQUALIZATION RATES ESTABLISHED BY THE NEW YORK STATE BOARD OF EQUALIZATION AND ASSESSMENTS.

To be completed by the Executive Budget Office

1606

STATEMENT OF FINANCIAL IMPACT
OF PROPOSED SUFFOLK COUNTY LEGISLATION

1. Type of Legislation

Resolution X Local Law_____ Charter Law_____

2. Title of Proposed Legislation

Accepting Donation of 2007 Lexus RX350
Vehicle Identification Number 2T2HK31U07C011141

3. Purpose of Proposed Legislation

Accept donation of 2007 Lexus RX350 vehicle from the National Insurance Crime Bureau for undercover use.

4. Will the Proposed Legislation Have a Fiscal Impact? **Yes X No_____**

5. If the answer to item 4 is "yes", on what will it impact? (circle appropriate category)

County	**X**	**Town**	**Economic Impact**
Village		**School District**	**Other (Specify):**
Library District		**Fire District**	

6. If the answer to item 4 is "yes", Provide Detailed Explanation of Impact.

The vehicle will replace existing fleet vehicle that has excessive mileage, thus saving the County the cost of repairs

7. Total Financial Cost of Funding over 5 Years on Each Affected Political Subdivision.

8. Proposed Source of Funding
National Insurance Crime Bureau

9. Timing of Impact
Immediate

10. Typed Name & Title of Preparer	11. Signature of Preparer	12. Date
Craig D. Pavlik Deputy Bureau Chief Administration		6/6/2014

SCIN FORM 175b (10/95)

1606

NICB
NATIONAL INSURANCE CRIME BUREAU

VEHICLE DONATION AGREEMENT

The National Insurance Crime Bureau ("NICB") does hereby donate to **Suffolk County District Attorney's Office, Labor, Insurance and Revenue Crimes Bureau** (the "Agency") the vehicle described as:

Year: 2007
Make: Lexus
Model: RX350
VIN: 2T2HK31U07C011141

The vehicle will be used by the Agency for **conducting condfidential insurance fraud investigations.**

This agreement is subject to the following conditions:

1. The Agency accepts from the NICB, the above-described vehicle for one dollar ($1.00) and other valuable considerations for use in pursuit of its lawful purpose. The Agency shall accept said vehicle "as is" and shall re-title the vehicle in the name of the Agency prior to any use.
2. In the event the vehicle is not re-titled in the name of the Agency within 90 days from the date last written below, the Agency shall immediately return said vehicle to the NICB.
3. In the event that any injury or property damage results from the above described activities while the vehicle is in the custody of the Agency, its agents or assigns, the Agency shall assume all liability.
4. The Agency does hereby release the NICB from any and all claims arising from its use of the vehicle.
5. The Agency agrees and warrants that it shall, if applicable, provide insurance coverage (self-insured agency) for the above-described vehicle in the normal course of its business.
6. The effective date of this agreement shall be the date the vehicle is delivered into the custody of the Agency.

IN WITNESS WHEREOF, the parties hereto have executed this agreement this 16 day of April, 202014.

THE AGENCY: Suffolk County District Attorney

By: Frank Guidice
Name of Signer

Its: Chief Investigator
Title

Date: 4/16/2014

NATIONAL INSURANCE CRIME BUREAU:

By: Kevin Gallagher
Name of Signer

Its: Director Of Operations-New York
Title

Date: 04/16/2014

VIN: 2T2HK31U07C011141

NICB File #: C1400200005

1606

2014 INTERGOVERNMENTAL RELATIONS
MEMORANDUM OF SUPPORT

TITLE OF BILL: A Resolution accepting the donation of a 2007 Lexus RX350, Vehicle Identification Number 2T2HK31U07C011141, from the National Insurance Crime Bureau for use by the Suffolk County District Attorney's Office.

PURPOSE OR GENERAL IDEA OF BILL: To accept a donation of a 2007 Lexus RX350, Vehicle Identification Number 2T2HK31U07C011141, from the National Insurance Crime Bureau for use by the Suffolk County District Attorney's Office for undercover investigations.

SUMMARY OF SPECIFIC PROVISIONS: This legislation will allow the County to accept a donation of a vehicle from the National Insurance Crime Bureau. The vehicle will replace an existing fleeted car with excessive (over 126,000) mileage. The vehicle will be used for undercover purposes.

JUSTIFICATION: Acceptance of this vehicle will allow the Suffolk County District Attorney's Office to replace a vehicle in its agency fleet with excessive mileage. It is anticipated that the costs associated with the vehicle will be minimal in comparison to constant maintenance on the older high mileage vehicle it will replace.

FISCAL IMPLICATIONS: Replacement of older fleeted vehicle.

1606

COUNTY OF SUFFOLK
OFFICE OF DISTRICT ATTORNEY

THOMAS J. SPOTA
DISTRICT ATTORNEY

Address Reply To:
Administration and Finance

MEMORANDUM

To: **Jon Schneider, Deputy County Executive**
Suffolk County Executive's Office

From: **Craig D. Pavlik, Administration and Finance**
Suffolk County District Attorney's Office

Date: **June 6, 2014**

Re: **Resolution Packet for the Acceptance of a Donated Vehicle**
"RESO-DA-DONATED LEXUS"

Certificate of Necessity Requested

Attached please find the following for the **Acceptance of a Donated Vehicle:**

- Draft Resolution
- Proposed Certificate of Necessity
- Memorandum of Support
- SCIN Forms
- Request for Introduction of Legislation
- Financial Impact Statement

Electronic copies of the resolution and SCIN forms will be transmitted to CE RESO REVIEW.

Due to the enormous strain on the fleet in the Suffolk County District Attorney's Office, it is requested that this resolution be passed with a Certificate of Necessity at the June 17, 2014 meeting.

If you have any questions concerning this resolution package, please do not hesitate to contact Craig Pavlik, Deputy Bureau Chief, at (631) 853-4153.

cc: Dennis M. Cohen, Chief Deputy County Executive
Lisa Santeramo, Assistant Deputy County Executive
Tom Vaughn, Director of Intergovernmental Relations

NORTH COUNTY COMPLEX • VETERANS MEMORIAL HIGHWAY • HAUPPAUGE, NY 11787-4311 • (631) 853-4153 • FAX#(631) 853-6211

COUNTY OF SUFFOLK
OFFICE OF DISTRICT ATTORNEY

1606

THOMAS J. SPOTA
DISTRICT ATTORNEY

Address Reply To:
Administration and Finance

June 6, 2014

Jon Schneider, Deputy County Executive
Office of the Suffolk County Executive
H. Lee Dennison Building
100 Veterans Memorial Highway
Hauppauge, New York 11788-0099

Re: Resolution with Certificate of Necessity

Dear Mr. Schneider:

At the direction of the District Attorney and in accordance with the County Executive All Department Heads Memorandum 2-14, I have attached a request for a Suffolk County Resolution.

The purpose of the resolution will be to accept a donated vehicle from the National Insurance Crime Bureau for undercover law enforcement purposes. An e-mail version of this resolution has been sent to CE RESO REVIEW and saved under the file names "RESO-DA-DONATED LEXUS."

Please submit this resolution to the Suffolk County Legislature with a Certificate of Necessity.

If you have any questions or need additional information concerning this matter, please contact me at your earliest opportunity.

Thank you for your attention to this matter.

Very truly yours,

Craig D. Pavlik
Deputy Bureau Chief

CDP:pk
Att.

cc: Dennis M. Cohen, Chief Deputy County Executive
Tom Vaughn, Director, Intergovernmental Relations
Lisa Santeramo Assistant Deputy County Executive
Patricia Saunders, Suffolk County Budget Office

NORTH COUNTY COMPLEX • VETERANS MEMORIAL HIGHWAY • HAUPPAUGE, NY 11787-4311 • (631) 853-4153 • FAX#(631) 853-6211

Intro. Reso. No. 1607-14 Laid on Table 6/17/14
Introduced by Presiding Officer on request of the County Executive

RESOLUTION NO. -2014, ACCEPTING AND APPROPRIATING A GRANT IN THE AMOUNT OF $1,116,067 FROM THE NEW YORK STATE DIVISION OF CRIMINAL JUSTICE SERVICES FOR THE GUN INVOLVED VIOLENCE ELIMINATION (GIVE) PROGRAM WITH 91.84% SUPPORT

WHEREAS, the New York State Division of Criminal Justice Services has made $1,116,067 in State funding available to Suffolk County to continue efforts to reduce violent crime, particularly gun-related crimes; and

WHEREAS, said grant funds are to be distributed between the Suffolk County District Attorney's Office, the Suffolk County Police Department, the Suffolk County Crime Lab and the Probation Department; and

WHEREAS, the operational period of the program will be from July 1, 2014, through June 30, 2015; and

WHEREAS, $395,884 in permanent salary expense and $177,183 in fringe benefits of the District Attorney's Office funding for the program has been included in the 2014 Suffolk County Operating Budget and in the 2015 Operating Budget Request; and

WHEREAS, $573,067 in revenue of the District Attorney's Office funding for the program has been included in the 2014 Suffolk County Operating Budget and in the 2015 Operating Budget Request, and

WHEREAS, $543,000 in said grant funds have not been included in the 2014 Suffolk County Operating Budget, and now therefore be it,

1st **RESOLVED**, that the County Comptroller and County Treasurer be and they hereby are authorized to accept and appropriate said grant funds as follows:

REVENUES:	AMOUNT
001-DIS-3368 – State Aid: GIVE 2014	$25,000
001-POL-3368 – State Aid: GIVE 2014	$467,000
001-PRO-3368 – State Aid: GIVE 2014	$41,000
001-MED-3368 – State Aid: GIVE 2014	$10,000

ORGANIZATIONS:

District Attorney's Office (DIS)
GIVE 2014
001-DIS-1167

4700-Miscellaneous	$25,000
4770-Special Services	$25,000

Police Department (POL)
GIVE 2014
001-POL-3672

1000-Personal Services	$291,000
1120-Overtime Salaries	$291,000
2000-Equipment	$20,000
2500-Other Equipment Not Otherwise	$20,000
3000-Supplies Material & Others	$8,000
3040-Outside Printing	$3,000
3500-Other Unclassified	$5,000
4000-Utilities	$88,000
4210-Computer Services	$88,000
4700-Miscellaneous	$5,000
4770-Special Services	$5,000
4900-Contracted Services	$55,000
4980-Contracted Agencies	$55,000
001-3613-4980-XXXX-To Be Determined	

Probation Department (PRO)
GIVE 2014
001-PRO-3155

1000-Personal Services	$40,000
1120-Overtime Salaries	$40,000
4300-Travel	$1,000
4340-Travel: Other	$1,000

Crime Laboratory (MED)
GIVE 2014
001-MED-4739

1000-Personal Services	$10,000
1120-Overtime Salaries	$10,000

and be it further

2nd **RESOLVED**, that the non-reimbursable fringe benefits of $99,182 associated with the overtime salaries for this grant are included in the 2014 Suffolk County Operating Budget; and be it further

3rd **RESOLVED**, that this Legislature, being the State Environmental Quality Review Act (SEQRA) lead agency, hereby finds and determines that this resolution constitutes a Type II action pursuant to Section 617.5(c)(20), (21) and (27) of the Title 6 of the New York Code of

Rules and Regulations (6 NYCRR) and within the meaning of Section 8-0109(2) of the New York Environmental Conservation Law as a promulgation of regulations, rules, policies, procedures and legislative decisions in connection with continuing agency administration, management and information collection, and the Suffolk County Council of Environmental Quality (CEQ) is hereby directed to circulate any appropriate SEQRA notices of determination of non applicability or non-significance in accordance with this resolution; and be it further

4th **RESOLVED**, that the County Executive be and hereby is authorized to execute the grant agreement between Suffolk County and the New York State Division of Criminal Justice Services.

DATED:

APPROVED BY:

_____

County Executive of Suffolk County

Date of Approval:

1607

2014 INTERGOVERNMENTAL RELATIONS
MEMORANDUM OF SUPPORT

TITLE OF BILL: Accepting and appropriating a grant in the amount of $1,116,067 from the New York State Division of Criminal Justice Services for the Gun Involved Violence Elimination (GIVE) Program with 91.84% support.

PURPOSE OR GENERAL IDEA OF BILL: To accept $1,116,067 in grant funding to support the efforts of the Suffolk County Police Department, the Suffolk County Crime Laboratory, the Suffolk County District Attorney's Office, and the Suffolk County Probation Department to reduce violent crime, specifically gun-related crime, in Suffolk County.

SUMMARY OF SPECIFIC PROVISIONS: This legislation will support an anti-violence program that provides investigative and patrol support for a variety of initiatives as well as dedicated prosecution efforts to address gun-related crime in Suffolk. In addition, the project provides for supporting equipment, software, confidential funds and consultant services.

JUSTIFICATION: Through analysis of Uniform Crime Reporting statistics for Part 1 Crimes, DCJS has identified 17 counties in New York State for assistance through the GIVE Program.

COORDINATION OF GRANT APPLICATION OR CONTRACT County of Suffolk		DATE 6/6/14
Submitting Department/Agency Suffolk County Police Department	Location 30 Yaphank Avenue, Yaphank 1607	
Contact Person In Department/Agency Sarah Furey Sr. Grants Analyst	Telephone Number 852-6042	Grant Application Due Date N/A

Instructions: Applicant will complete all items on this form. If an item is not applicable, enter "NA". If additional space is needed, insert an asterisk (*) in the item box and attach additional information on an 8 ½" X 11" sheet cross referenced to the item.

I. BACKGROUND INFORMATION

1. Grant Title **Gun Involved Violence Elimination (GIVE) 2014**

2. Statutory Legislation (Public Law No. & Title & Department Administering Grant Program) FY2014-2015 NYS Budget, Administered by NYS Division of Criminal Justice Services

3. Grant/Contract Status (Check One Box)
A. __X_New Program Application
B. ___Renewal Application
C. ___Supplemental (Specify) _____
D. ___Extension of Funding Period
E. ___Contract

4. General Purpose of Grant/Contract (Describe briefly. If it is a refunding, please attach a recent progress report, including summary of goal attainment.).
Grant funding will allow the Suffolk County Police Department, the Suffolk County District Attorney, the Suffolk County Crime Lab and the Suffolk County Probation Department to continue to participate in a multi-agency effort to reduce gun violence and other violent crime in Suffolk County.

5. County Departments/Agencies Affected (Include any with similar operational programs, regardless of their eligibility for this program.) Police, District Attorney, Crime Lab, Probation

II. BUDGET INFORMATION

1. Term of Contract From 7/1/14 To: 6/30/15

2. Financial Assistance Requested

SOURCE	*FIRST FUNDING CYCLE* *Combined agency funds*		*SECOND FUNDING CYCLE*		*THIRD FUNDING CYCLE*	
	Amount	**Percent**	**Amount**	**Percent**	**Amount**	**Percent**
Federal	$	%	$	%	$	%
State	$1,116,067	91.84%	$	%	$	%
Private	$	%	$	%	$	%
County	$99,182	8.16%	$	%	$	%
Total	$1,215,249	100%	$	100%	$	100%

1607

3. Explanation of Requested County Financial Assistance

Category	*Total Requested*	*Personnel Costs Requested*	*Non-Personnel Costs Requested*
TOTAL COUNTY SHARE:	$99,182	$	$99,182
A. Cash Contribution	$99,182	$	$99,182
B. In-Kind Contribution	$	$	$

4. Total Number of New Positions Requested 0

5. Can This Program Be Refunded by the Proposed Non-County Sources?

X YES NO

6. Estimated Expected Additional Indirect Costs (Costs to County not delineated in Budget Request, for example, added overhead, capital expenditures required as a result of project activity, associated administrative costs, etc.)

Some additional indirect costs resulting from administrative oversight may be incurred.

7. What Do You Anticipate Happening When the Federal, State and/or Private Financial Assistance is Discontinue (That is, program termination, reduced services, financial implications, layoffs, etc.)?

In the event that another source of outside funding is not found, continuation of this program will be re-evaluated based on community need and available resources of the various Departments.

8. Attach a List of Potential Subcontractors, If any, outlining the purpose of each subcontract (That is, 456 and 490 account items; use an additional 8 ½" X 11" sheet).

III. COUNTY EXECUTIVE'S OFFICE REVIEW

1. Intergovernmental Relations Division Review:	Approved Disapproved	2. Signature of Coordinator	3. Date
4. Comments			
5. Budget Office Review:	Approved Disapproved	6. Signature of Budget Director	7. Date
8. Comments			

GRANT BUDGET ANALYSIS	COUNTY BUDGET YEAR 2014			Page 1 of 3
CATEGORY	APPROPRIATION NUMBER GRANTOR FUNDS	APPROPRIATION NUMBER COUNTY FUNDS	APPROPRIATION NUMBER IN-KIND CONTRIBUTION	REMARKS
1000 PERSONAL SERVICES:	**341,000**			
1100 Permanent Salaries				
1110 Interim Salaries				
1120 Overtime Salaries	341,000			
2000 EQUIPMENT:	**20,000**			
2010 Furniture & Fixtures				
2020 Office Machines				
2090 Radio and Communication				
2500 Other Equip Not Otherwise	20,000			
3000 SUPPLIES MATERIALS & OTHERS:	**8,000**			
3040 Outside Printing	3,000			
3160 Computer Software				
3370 Medical, Dental & Laboratory Supplies				
3390 Policeman Supplies				
3500 Other Unclassified	5,000			
3680 Repairs: Special Equipment				
4000 CONTRACTUAL EXPENSES:	**88,000**			1607
4010 Telephone & Telegraph				
4015 Cellular Communications				
4210 Computer Services	88,000			
4300 TRAVEL:	**1,000**			
4310 Employee Misc - Expenses				
4330 Travel Employee Contracts				
4340 Travel Other Contracts	1,000			

SCIN Form 164D (10-80)

GRANT BUDGET ANALYSIS	COUNTY BUDGET YEAR 2014			Page 2 of 3
CATEGORY	APPROPRIATION NUMBER GRANTOR FUNDS	APPROPRIATION NUMBER COUNTY FUNDS	APPROPRIATION NUMBER IN-KIND CONTRIBUTION	REMARKS
4400 FEES FOR FACILITIES 4410 Rent: Offices & Buildings				
4500 FEES FOR SERVICES: 4560 Fees for Services, Non-Employees				
4700 MISCELLANEOUS 4770 Special Services	**30,000** 30,000			
4900 CONTRACTED SERVICES (LIST) 4980-Contracted Agencies 001-3613-4980-XXXX-To Be Determined	**55,000** 55,000			
8000 EMPLOYEE BENEFITS: 8280 Retirement 8300 Insurance: Worker Compensation 8330 Social Security 8360 Health Insurance 8380 Benefit Fund		**99,182** 90,145 9,037	1601	County costs not eligible for reimbursement under this program
OTHER (List Source & Brief Explanation)				

I certify that the above in-kind contribution are not currently being used to support other grants

SCIN Form 164D (10-80)

DETAIL LISTING OF 1000 ACCOUNT PERSONAL SERVICES

TITLE OF POSITION	GRADE / STEP	SALARY	EMPLOYEE NAME	SOURCE OF FUNDING BY %		
				GRANTOR	COUNTY	IN-KIND
Police Officer	6	93.71/hr OT	Various	100		
Sergeant		110.54/hr OT	Various	100		
Lieutenant		123.05/hr OT	Various	100		
Detective	4	105/hr OT	Various	100		
Detective Sergeant		116.07/hr OT	Various	100		
Detective Lieutenant		129.20/hr OT	Various	100		
Research Technician	17	51.13/hr OT	Various	100		
Research Analyst	20	58.62/hr OT	Various	100		
Senior Research Analyst	24	69.24/hr OT	Various	100		
Probation Officer	21/12	61.41/hr OT	Various	100		
Senior Probation Officer	23	69.02/hr OT	Various	100		
Senior Clerk Typist	12	40.59/hr OT	Various	100		

160

SCIN Form 164D (10-80)

1607

STATEMENT OF FINANCIAL IMPACT
OF PROPOSED SUFFOLK COUNTY LEGISLATION

1. Type of Legislation

   Resolution _X_ Local Law ___ Charter Law ___

2. Title of Proposed Resolution
   Accepting and appropriating a grant in the amount of $1,116,067 from the New York State Division of Criminal Justice Services for the Gun Involved Violence Elimination (GIVE) Program with 91.84% support.

3. Purpose of Proposed Legislation
   To accept $1,116,067 from the New York State Division of Criminal Justice Services to continue a project to reduce violent crime, particularly gun-related crime.

4. Will the Proposed Legislation have a fiscal impact? Yes __ No _X__

5. If the answer to Item 4 is "Yes," on what will it impact?
   (Circle appropriate category)

   County Town Economic Impact

   Village School District Other (specify):

   Library District Fire District:

6. If answer to Item 5 is "Yes," provide detailed explanation of impact:

7. Total financial Cost of Funding over 5 years on each affected political or Other Subdivision:

   Non-reimbursable fringe benefit costs of approximately $99,182 will be incurred through June 30, 2015. Additional fringe benefits costs will only be incurred if the program receives additional funding in subsequent years.

8. Proposed Source of Funding:
   New York State Division of Criminal Justice Services: State funding

9. Timing of Impact
   Immediate

10. Typed Name & Title of Preparer 11. Signature of Preparer 12. Date

    Sarah Furey
    Senior Grants Analyst Sarah Furey by [illegible] 6/9/14

SCIN FORM NO. 175b (10/95)

1607

STATE OF NEW YORK
DIVISION OF CRIMINAL JUSTICE SERVICES
Alfred E. Smith Office Building
80 South Swan Street
Albany, New York 12210
http://criminaljustice.ny.gov

ANDREW M. CUOMO
GOVERNOR

MICHAEL C. GREEN
EXECUTIVE DEPUTY COMMISSIONER

May 1, 2014

The Honorable Thomas Spota
District Attorney
Suffolk County District Attorney's Office
N. County Complex Veterans Memorial Highway
Building 77
Hauppauge, NY 11788

Honorable Edward Webber
Commissioner
Suffolk County Police Department
30 Yaphank Avenue
Yaphank, NY 11980

Dear District Attorney Spota and Commissioner Webber:

On behalf of the NYS Division of Criminal Justice Services (DCJS), I am pleased to announce that your Gun Involved Violence Elimination (GIVE) Partnership will receive $1,116,067 for NYS fiscal year 2014 – 2015. DCJS anticipates that these funds will be utilized by your partnership to support targeted firearm and violent crime reduction efforts within the designated jurisdictions.

The enclosed spreadsheet represents your county's entire budget request for GIVE. The ***"Awarded Budget"*** column reveals the amount of funding approved by DCJS for each individual request.

The process DCJS utilizes to make GIVE award decisions is deliberate and focuses on awarding funds to positions and items justified as being critical to the successful implementation of the proposed strategies. Participating agencies are expected to use the approved budget in the "Awarded Budget" column when developing this year's GIVE contract. Although DCJS may permit minor adjustments to be made to agency budgets, such budget reallocation requests are not encouraged and must be made in writing by the head of the participating agency. Requests for budget reallocations on GIVE contracts will be carefully scrutinized by the Deputy Commissioner of the DCJS Office of Public Safety to ensure the requested budget amendment is consistent with the overall GIVE strategy being employed. DCJS reserves the right to approve or deny any budget reallocation request. Reallocation requests must be made in a timely manner, and grantees must receive approval from DCJS before moving forward with any of the expenditure(s) involved in the reallocation.

1607

We look forward to working with you through GIVE and providing you with support in your efforts to reduce shootings, homicides and firearm related violent crime in your jurisdiction. In addition, as one of our GIVE partners, you are now part of the GIVE network. Our team in the DCJS Office of Public Safety, led by Deputy Commissioner Mike Wood and Director Johanna Sullivan, will be contacting you to assist with the implementation of your GIVE strategies and provide you with further information on the network. If you have any questions concerning this award or GIVE, please contact Deputy Commissioner Wood or Director Sullivan at 518-485-7620.

DCJS Office of Program Development and Funding staff will be contacting the individuals listed in your application as your partnership agencies' "primary contacts," to assist in contract preparation. In the meantime, if you have any questions concerning the contract process, please contact Program Representative Katie Nastars at (518) 457-6030.

Very truly yours,

Michael C. Green
Executive Deputy Commissioner

MCG:AMS:pr
Enclosure

GIVE 2014 1607

Suffolk

POLICE DEPARTMENT BUDGET

PERSONNEL	Requested Budget	Awarded Budget
Overtime to Support Initiatives/Strategies		
Crime Analyst OT	$32,000	$16,000
FIO OT	$150,000	$75,000
Firearms Suppression Unit Detective OT	$105,000	$85,000
Laser Hot Spot Detective OT	$15,000	$7,500
Detective - Division Shooting & Firearms Investigative OT	$40,000	$40,000
Patrol - Enforcement & Training OT	$100,000	$40,000
Narcotics Detective Investigative OT	$40,000	$20,000
CPTED OT	$10,000	$7,500
TOTAL PERSONNEL	**$492,000**	**$291,000**
EQUIPMENT / SOFTWARE		
Network Scanner	$2,000	$0
2 pair binoculars	$2,000	$0
Surveillance Video Cameras, Assorted mini video & or audio recording, repeaters, photo cameras, transmitters, Antennas, tactical receivers, telephone analysis software-Narcotic	$40,000	$20,000
Digital video camera	$1,000	$0
TOTAL EQUIPMENT	**$45,000**	**$20,000**
OTHER EXPENSES / SUPPLIES		
Confidential funds - Narcotics buy money	$25,000	$5,000
Advertising	$20,000	$0
Printing for CPTED tip Cards	$3,000	$3,000
Orion Intelligence System maintains & upgrades	$10,000	$10,000
Visual Analytics software licensing etc.	$78,000	$78,000
Youth Outreach	$5,000	$5,000
TOTAL SUPPLIES	**$141,000**	**$101,000**
CONSULTANT SERVICES		
Teny Gross - Training for Street Workers	$5,000	$0
Economic Opportunity Council - Street Workers costs	$45,000	$45,000
Economic Opportunity Council - Community Youth Survey	$10,000	$10,000
TOTAL CONSULTANT SERVICES	**$60,000**	**$55,000**
TRAVEL & TRAINING		
CPTED Training	$10,000	$0
TOTAL TRAVEL & TRAINING	**$10,000**	**$0**
POLICE DEPARTMENT TOTAL	**$748,000**	**$467,000**

1607

DISTRICT ATTORNEY'S OFFICE BUDGET

PERSONNEL	Requested Budget	Awarded Budget
Job Title / Position		
ADA - Homicide Bureau- 55%	$61,133	$61,133
ADA - Homicide Bureau-55%	$61,133	$61,133
ADA - Special Investigation Bureau- 55%	$66,291	$66,291
ADA - Special Investigation Bureau- 55%	$66,291	$66,291
ADA - Major Crime Bureau- 55%	$58,109	$58,109
ADA - Major Crime Bureau- 55%	$75,708	$75,708
Crime Victims Advocate	$7,219	$7,219
Fringe Benefits for Positions		
ADA - Homicide Bureau- 55%	$27,842	$27,842
ADA - Homicide Bureau-55%	$27,842	$27,842
ADA - Special Investigation Bureau- 55%	$25,267	$25,267
ADA - Special Investigation Bureau- 55%	$25,267	$25,267
ADA - Major Crime Bureau- 55%	$26,945	$26,945
ADA - Major Crime Bureau- 55%	$32,163	$32,163
Crime Victims Advocate	$11,857	$11,857
TOTAL PERSONNEL	**$573,067**	**$573,067**
OTHER EXPENSES / SUPPLIES		
Buy money for undercover gun purchases	$30,000	$25,000
TOTAL SUPPLIES	**$30,000**	**$25,000**
DISTRICT ATTORNEY'S OFFICE TOTAL	**$603,067**	**$598,067**

SHERIFF'S OFFICE BUDGET

PERSONNEL	Requested Budget	Awarded Budget
Overtime to Support Initiatives/Strategies		
OT - Sheriff's Office GREAT Program Initiative	$80,000	$0
TOTAL PERSONNEL	**$80,000**	**$0**
EQUIPMENT / SOFTWARE		
TOTAL EQUIPMENT	**$0**	**$0**
OTHER EXPENSES / SUPPLIES		
TOTAL SUPPLIES	**$0**	**$0**
CONSULTANT SERVICES		
TOTAL CONSULTANT SERVICES	**$0**	**$0**
TRAVEL & TRAINING		
TOTAL TRAVEL & TRAINING	**$0**	**$0**
SHERIFF'S OFFICE TOTAL	**$80,000**	**$0**

SUFFOLK COUNTY CRIME LAB

PERSONNEL	Requested Budget	Awarded Budget
Overtime to Support Initiatives/Strategies		
OT for Firearms examiners	$12,933	$10,000
CRIME LAB TOTAL	**$12,933**	**$10,000**

1607

COUNTY PROBATION BUDGET

PERSONNEL	Requested Budget	Awarded Budget
Overtime to Support Initiatives/Strategies		
OT 917hrs approx. x $55-$65/hr.	$55,000	$40,000
TOTAL PERSONNEL	**$55,000**	**$40,000**
TRAVEL & TRAINING		
DCJS training	$1,000	$1,000
TOTAL TRAVEL & TRAINING	**$1,000**	**$1,000**
COUNTY PROBATION TOTAL	**$56,000**	**$41,000**

COUNTY GRAND TOTAL - $1,487,067 $1,116,067

COUNTY OF SUFFOLK

1607

STEVEN BELLONE
COUNTY EXECUTIVE

EDWARD WEBBER
POLICE COMMISSIONER

POLICE DEPARTMENT
MEMORANDUM

TO: **Jon Schneider, Deputy County Executive**
Suffolk County Executive's Office

FROM: **Mark White, Chief of Support Services**
Suffolk County Police Department

DATE: **June 9, 2014**

SUBJECT: **Resolution Packets & SCIN Forms for the GIVE 2014 Grant Program**
Project Number: GV14-1016-E00

Certificate of Necessity Requested

Attached please find the following for the **GIVE 2014 Grant Program:**

- Draft Grant Resolution
- Proposed Certificate of Necessity
- Memorandum of Support
- Grant SCIN Forms
- Request for Introduction of Legislation
- Financial Impact Statement
- Copy of grant award letter and approved budget

Electronic copies of the resolution and SCIN forms will be transmitted to CE RESO REVIEW. Grant contract signature will be done on-line in the DCJS Grants Management System (GMS) upon passage and signature of the resolution.

Due to the fact that this is a one year project with no extensions given, it is imperative that the resolution to accept and appropriate the funding for the project be passed with a Certificate of Necessity at the June 17th meeting in order to allow for sufficient time to implement and complete grant activities prior to the grant end date of June 30, 2015.

If you have any questions concerning this resolution package please do not hesitate to contact Susan Krause, Grants Analyst, at (631) 852-6601 or Sarah Furey, Senior Grants Analyst, at (631) 852-6042.

cc: Dennis M. Cohen, Chief Deputy County Executive
Lisa Santeramo, Assistant Deputy County Executive
Tom Vaughn, Director of Intergovernmental Relations
Evelyn Creen, Senior Federal & State Aid Claims Examiner

Intro. Reso. No. 1608-14 Laid on Table 6/17/14

Introduced by Presiding Officer on request of the County Executive

RESOLUTION NO. -2014, ACCEPTING AND APPROPRIATING FUNDING IN THE AMOUNT OF $40,000 FROM THE U.S. DEPARTMENT OF JUSTICE, FEDERAL BUREAU OF INVESTIGATION, FOR THE EXPRESS PURPOSE OF ROOF REPAIR TO AN AMMUNITIONS BUNKER LOCATED AT THE SUFFOLK COUNTY POLICE DEPARTMENT FIREARMS RANGE COMPLEX AT WESTHAMPTON, SUFFOLK COUNTY, NEW YORK WITH 100% SUPPORT

WHEREAS, the New York Office of the FBI has utilized the SCPD Firearms Range in Westhampton, New York for Agent training and qualification, SWAT training, and police training schools for approximately twenty-two years; and

WHEREAS, the SCPD has allowed the FBI to store munitions, including ammunition, targets, and cleaning supplies used for training purposes, in available storage bunkers; and

WHEREAS, the bunker currently in use by the FBI has fallen into disrepair and requires repair to its roof, without such repair the bunker will no longer be a viable location for the storage of volatile materials such as those required for Swat Training, Police Training Schools, and FBI Agent Training; and

WHEREAS, the FBI has agreed to supply $40,000 in funding to address the roof repair required; now, therefore, be it

1st RESOLVED, that Suffolk County, being the State Environmental Quality Review Act (SEQRA) Lead Agency hereby finds and determines that the adoption of this resolution constitutes a Type II Action pursuant to Title 6 NYCRR Part 617.5(C)(1)(2)(20)(27) as this legislative decision involves the routine maintenance, repair and rehabilitation of a structure or facility, in kind. As such, this Legislature has no further responsibilities under SEQRA; and be it further

2nd RESOLVED, that the County Comptroller and County Treasurer be and they hereby are authorized to accept and appropriate said grant funds as follows:

	AMOUNT
REVENUES:	
001-4351-Federal Aid: Firearms Bunker Repair	$40,000

ORGANIZATIONS:

Police Department (POL)
Firearms Bunker Repair
001-POL-3677

3650-Repairs Buildings	$40,000
3650–Repairs Buildings	40,000

and be it further

3rd RESOLVED, that the County Executive be and hereby is authorized to execute the agreement between Suffolk County and the Federal Bureau of Investigation.

DATED:

APPROVED BY:

_____

County Executive of Suffolk County

Date of Approval:

2014 INTERGOVERNMENTAL RELATIONS
MEMORANDUM OF SUPPORT

TITLE OF BILL: Accepting and appropriating funding in the amount of $40,000 from the U.S. Department of Justice, Federal Bureau of Investigation, for the express purpose of roof repair to an ammunitions bunker located at the Suffolk County Police Department firearms range complex at Westhampton, Suffolk County, New York with 100% support.

PURPOSE OR GENERAL IDEA OF BILL: To accept $40,000 in funding to support the repair of the roof of a munitions bunker located at the Suffolk County Police Department Firearms Range Complex in Westhampton, New York in order to maintain its usefulness as a storage location for volatile training supplies. The bunker is used by both the SCPD and the FBI.

SUMMARY OF SPECIFIC PROVISIONS: This legislation will result in the acceptance of funding to repair a munitions storage bunker currently in use by both the FBI and the SCPD as a storage location for volatile training supplies, failure to repair the bunker will result in it no longer being an acceptable storage location.

JUSTIFICATION: The SCPD maintains a Firearms Range in Westhampton, New York. The Range is used by both the SCPD and the FBI to train both FBI personnel and SCPD personnel in firearms related activities. Both the FBI and the SCPD use training supplies such as ammunition, targets, and cleaning supplies in the course of training personnel. These supplies are stored in a munitions bunker which requires repair to its roof. Without the roof repair it will no longer be a viable place to store the materials necessary to train law enforcement personnel.

COORDINATION OF GRANT APPLICATION OR CONTRACT County of Suffolk		DATE 6/10/14
Submitting Department/Agency Suffolk County Police Department	Location 30 Yaphank Avenue, Yaphank	
Contact Person In Department/Agency Sarah Furey Sr. Grants Analyst	Telephone Number 852-6042	Grant Application Due Date N/A

Instructions: Applicant will complete all items on this form. If an item is not applicable, enter "NA". If additional space is needed, insert an asterisk (*) in the item box and attach additional information on an 8 ½" X 11" sheet cross referenced to the item.

I. BACKGROUND INFORMATION

1. Grant Title **Firearms Bunker Repair**

2. Statutory Legislation (Public Law No. & Title & Department Administering Grant Program)
28 U.S.C. § 533 and 28 C.F.R. 0.85, U.S. Department of Justice, Federal Bureau of Investigation

3. Grant/Contract Status (Check One Box)
A. __X_New Program Application
B. ___Renewal Application
C. ___Supplemental (Specify) _____
D. ___Extension of Funding Period
E. ___Contract

4. General Purpose of Grant/Contract (Describe briefly. If it is a refunding, please attach a recent progress report, including summary of goal attainment.).
Funding will allow for the repair of a munitions bunker located at the SCPD Firearms Range Complex. The bunker's roof is in need of repair to insure that the bunker can remain viable as a storage location for munitions and other firearms training supplies.

5. County Departments/Agencies Affected (Include any with similar operational programs, regardless of their eligibility for this program.) Police

II. BUDGET INFORMATION

1. Term of Contract From 5/13/2014 To: 5/13/2024

2. Financial Assistance Requested

SOURCE	*FIRST FUNDING CYCLE*		*SECOND FUNDING CYCLE*		*THIRD FUNDING CYCLE*	
	Amount	**Percent**	**Amount**	**Percent**	**Amount**	**Percent**
Federal	$40,000	100%	$	%	$	%
State	$	%	$	%	$	%
Private	$	%	$	%	$	%
County	$	%	$	%	$	%
Total	$40,000	100%	$	100%	$	100%

3. Explanation of Requested County Financial Assistance

Category	*Total Requested*	*Personnel Costs Requested*	*Non-Personnel Costs Requested*
TOTAL COUNTY SHARE:	$None	$	$None
A. Cash Contribution	$	$	$
B. In-Kind Contribution	$	$	$

4. Total Number of New Positions Requested 0

5. Can This Program Be Refunded by the Proposed Non-County Sources?

X YES NO

6. Estimated Expected Additional Indirect Costs (Costs to County not delineated in Budget Request, for example, added overhead, capital expenditures required as a result of project activity, associated administrative costs, etc.)

Some additional indirect costs resulting from administrative oversight may be incurred.

7. What Do You Anticipate Happening When the Federal, State and/or Private Financial Assistance is Discontinue (That is, program termination, reduced services, financial implications, layoffs, etc.)?

In the event that another source of outside funding is not found, continuation of this program will be re-evaluated based on community need and available resources of the various Departments.

8. Attach a List of Potential Subcontractors, If any, outlining the purpose of each subcontract (That is, 456 and 490 account items; use an additional 8 ½" X 11" sheet).

III. COUNTY EXECUTIVE'S OFFICE REVIEW

1. Intergovernmental Relations Division Review:	Approved Disapproved	2. Signature of Coordinator	3. Date

4. Comments

5. Budget Office Review:	Approved Disapproved	6. Signature of Budget Director	7. Date

8. Comments

GRANT BUDGET ANALYSIS	COUNTY BUDGET YEAR 2014			Page 1 of 3
CATEGORY	APPROPRIATION NUMBER GRANTOR FUNDS	APPROPRIATION NUMBER COUNTY FUNDS	APPROPRIATION NUMBER IN-KIND CONTRIBUTION	REMARKS
1000 PERSONAL SERVICES: 1100 Permanent Salaries 1110 Interim Salaries 1120 Overtime Salaries				
2000 EQUIPMENT: 2010 Furniture & Fixtures 2020 Office Machines 2090 Radio and Communication 2500 Other Equip Not Otherwise				
3000 SUPPLIES MATERIALS & OTHERS: 3040 Outside Printing 3160 Computer Software 3370 Medical, Dental & Laboratory Supplies 3390 Policeman Supplies 3500 Other Unclassified 3650 Repairs: Buildings 3680 Repairs: Special Equipment	**40,000** 40,000			
4000 CONTRACTUAL EXPENSES: 4010 Telephone & Telegraph 4015 Cellular Communications 4210 Computer Services				
4300 TRAVEL: 4310 Employee Misc - Expenses 4330 Travel Employee Contracts 4340 Travel Other Contracts				

SCIN Form 164D (10-80)

GRANT BUDGET ANALYSIS	COUNTY BUDGET YEAR 2014			Page 2 of 3
CATEGORY	APPROPRIATION NUMBER GRANTOR FUNDS	APPROPRIATION NUMBER COUNTY FUNDS	APPROPRIATION NUMBER IN-KIND CONTRIBUTION	REMARKS
4400 FEES FOR FACILITIES 4410 Rent: Offices & Buildings				
4500 FEES FOR SERVICES: 4560 Fees for Services, Non-Employees				
4700 MISCELLANEOUS 4770 Special Services				
4900 CONTRACTED SERVICES (LIST) 4980-Contracted Agencies 001-3613-4980-XXXX-To Be Determined				
8000 EMPLOYEE BENEFITS: 8280 Retirement 8300 Insurance: Worker Compensation 8330 Social Security 8360 Health Insurance 8380 Benefit Fund				
OTHER (List Source & Brief Explanation)				

I certify that the above in-kind contribution are not currently being used to support other grants

SCIN Form 164D (10-80)

DETAIL LISTING OF 1000 ACCOUNT PERSONAL SERVICES

TITLE OF POSITION	GRADE / STEP	SALARY	EMPLOYEE NAME	SOURCE OF FUNDING BY %		
				GRANTOR	COUNTY	IN-KIND
None						

SCIN Form 164D (10-80)

STATEMENT OF FINANCIAL IMPACT
OF PROPOSED SUFFOLK COUNTY LEGISLATION

1. Type of Legislation

Resolution _X_ Local Law ___ Charter Law ___

2. Title of Proposed Resolution
Accepting and appropriating funding in the amount of $40,000 from the U.S. Department of Justice, Federal Bureau of Investigation, for the express purpose of roof repair to an ammunitions bunker located at the Suffolk County Police Department Firearms Range Complex at Westhampton, Suffolk County, New York with 100% support

3. Purpose of Proposed Legislation
To accept $40,000 from the U.S. Department of Justice, Federal Bureau of Investigation to repair a roof on a munitions bunker in use by both the SCPD and the FBI located at the SCPD Firearms Range Complex in Westhampton, New York.

4. Will the Proposed Legislation have a fiscal impact? Yes __ No _X__

5. If the answer to Item 4 is "Yes," on what will it impact?
(Circle appropriate category)

County	Town	Economic Impact
Village	School District	Other (specify):
Library District	Fire District:	

6. If answer to Item 5 is "Yes," provide detailed explanation of impact:

7. Total financial Cost of Funding over 5 years on each affected political or Other Subdivision:

None

8. Proposed Source of Funding:
U.S. Department of Justice, Federal Bureau of Investigation

9. Timing of Impact
Immediate

10. Typed Name & Title of Preparer	11. Signature of Preparer	12. Date
Susan C. Krause Grants Analyst		6/10/14

SCIN FORM NO. 175b (10/95)

May 9, 2014

FEDERAL BUREAU OF INVESTIGATION AND THE SUFFOLK COUNTY POLICE DEPARTMENT MEMORANDUM OF AGREEMENT

Amendment

This Amendment modifies a Memorandum of Agreement (MOA) dated September 17, 2004, between the Federal Bureau of Investigation (FBI) and the Suffolk County Police Department (SCPD), hereinafter referred to as the "parties," to define the scope of work and responsibilities of the parties concerning FBI funding for improvements to the facilities at the FBI Firearms Range in Westhampton, New York, to be completed on a facility currently owned by Suffolk County, New York (Premises). This Amendment consists of 5 Revisions, each numbered separately. For ease of review, affected paragraphs or subsections are reprinted with new language shown in **bold**. Topic headings are shown as they appear in the original document, typically in bold face type.

Revision 1: The following language is to be added to the agreement:

4. SCOPE: The FBI will provide the funds necessary to complete the roof repairs of the bunker located on the range complex at Suffolk County, New York.

Revision 2: The following language is to be added to the agreement:

5. FUNDING: The FBI hereby agrees to spend a sum of money not to exceed forty thousand dollars ($40,000) to repair the roof of an ammunition bunker located at the Suffolk County Firearms Range.

Revision 3: The following change will be made to the agreement:

8. POINTS OF CONTACT:

b. SCPD: Sergeant **Matthew O'Malley** (631)852-8061

Revision 4: The following change is to be made to the agreement:

9. SETTLEMENT OF DISPUTES:

b. Issues or problems arising under the MOU that cannot be resolved by POCs may be raised by any party, through appropriate channels, to the FBI's Chief Contracting Officer (CCO) for resolution.

Revision 5: The following change will be made to the agreement:

12. FORCE AND EFFECT

This MOA is the complete and exclusive statement of agreement between the parties with respect to FBI funding for roof repair to the facilities known as the firearms range complex at Suffolk County, New York. This MOA supersedes all written and oral proposals and other communications between the parties. All activities of the parties under this MOA will be carried out in accordance with the terms and conditions of this MOA. Nothing in this MOA is intended to create, nor does it create, an enforceable legal right or private right of action. The foregoing represents the understandings reached between the FBI and SCPD upon the matters referred to herein.

This MOA addendum will enter into effect upon signature of all parties and will remain in effect for ten years. It may be extended by mutual written consent of the parties' authorized representatives.

APPROVALS

This Amendment consisting of 3 Revisions, taken together with the Agreement dated September 17, 2004 to which it is attached, contains the entire agreement between the parties. It will become effective upon the signatures of all officials listed below, or their authorized representatives.

FOR THE FEDERAL BUREAU OF INVESTIGATION

By: Ronald Twersky Date 5-13-2014

Ronald Twersky
Special Agent in Charge,
FBI New York Division

By:_____ Date _____

Contracting Officer
FBI Headquarters, Washington, DC

FOR THE SUFFOLK COUNTY POLICE DEPARTMENT

By:_____ Date _____

Edward Webber
Commissioner
Suffolk County Police Department

FOR SUFFOLK COUNTY

By:_____ Date _____

Steven Bellone
County Executive

Approved As To Legality:

By:_____ Date _____

Dennis M. Brown
Suffolk County Attorney

09-M-002

MEMORANDUM OF UNDERSTANDING

BETWEEN

THE FEDERAL BUREAU INVESTIGATION

AND

THE SUFFOLK COUNTY POLICE DEPARTMENT

FOR

ACCESS AND USE OF THE SUFFOLK COUNTY FIREARMS RANGE AND AMMUNITION BUNKER

GENERAL PROVISIONS

1. PURPOSE: The purpose of this Memorandum of Understanding (MOU) between the Federal Bureau of Investigation (FBI) and the Suffolk County Police Department (SCPD), hereinafter referred to as the "parties", is to define the scope of work and responsibilities of the parties concerning the use of the SCPD Firearms Range and Ammunition Bunker located in Westhampton, New York. It sets forth the agreed upon procedures for management, accountability, direction, reporting, and execution of this MOU.

2. BACKGROUND: The SCPD Firearms Range (hereinafter, "the range") located in Westhampton, New York has been utilized by the New York Office (NYO) of the FBI for the past 12 years for Agent training and qualification, SWAT training, and Police training schools. Training by the FBI is conducted year-round at the facility, which includes 25-, 50- and 200-yard live-firing ranges, a live-fire shooting house, a live-fire Hogan's Alley, several simulations shooting houses and an EVOC training track. During calender year 2003, the NYO Firearms Staff trained over 1400 law enforcement personnel (FBI and non-FBI) at the SCPD facility.

Munitions, including ammunition, targets and cleaning supplies are stored at the facility for training purposes. Currently, these munitions are stored in a secure area in the SCPD bunker. This arrangement is no longer viable as the storage capacity of the SCPD bunker is close to being exhausted.

SCPD has offered the FBI use of another bunker for storage of munitions. This bunker would be made available without charge. However, refurbishment, at the FBI's expense, is necessary to bring the bunker up to compliant standards for the storage of ammunition. The

bunker is a former ground-level Nike missile silo. Such refurbishing includes removal of the current blast doors to install secure rolltop doors, repair and securing of the rolling roof, outfitting of electric and installation of a minor heating/cooling system and clean-up of the grounds.

The bunker is located on the range complex which is a Suffolk County, New York facility. On county facilities, only approved contractors are permitted to perform work. The contractors selected for the refurbishing of the proposed bunker, Austin Interiors, Inc. and All Service Electric, are the sole contractors authorized by Suffolk County to perform such work on the county facility, and have previously completed several similar refurbishing contracts to other bunkers at the facility.

3. AUTHORITY: The FBI is entering into this MOU under the authority provided by 28 U.S.C. § 533 and 28 C.F.R. 0.85.

4. SCOPE: This MOU defines the scope of work and the responsibilities of the parties to the agreement:

a. The FBI and the SCPD will each assign a point of contact for this agreement. They will address and resolve all issues related to this agreement.

b. Specific Duties of the FBI:

(1) It shall be the duty of the FBI to plan, coordinate, and supervise firearms training for its personnel at the SCPD Firearms Range. The FBI will oversee the scheduling and management of FBI personnel using the SCPD Firearms Range with the SCPD.

(2) The FBI will provide the funds necessary to complete the refurbishing of the bunker located on the range complex at Suffolk County, New York as well as any continuing costs such as a telephone line for an alarm and maintenance of the bunker.

(3) Assist the SCPD as required.

c. Specific Duties of the SCPD:

(1) The SCPD agrees to permit the FBI to utilize the portion of the improved bunker as the FBI deems necessary, for storage of ammunition, targets and weapons, which will be under the exclusive control of the FBI. The SCPD also agrees to furnish electricity to the bunker at no charge. The improved bunker will

remain the property of SCPD.

(2) The SCPD will also utilize a separate secured portion within the bunker for storage, which will be under the exclusive control of the SCPD.

(3) The SCPD also agrees to continue to allow the FBI to utilize the ranges for FBI firearms training, subject to availability and approval of the Commanding Officer, Firearms Training Unit, SCPD.

(4) The SCPD shall be responsible for all costs associated with the operation of the range.

(5) Assist the FBI as required.

d. General Duties:

(1) The parties shall mutually agree to the times and dates of the FBI's use of the SCPD Firearms Range. However, should the parties be unable to agree on the times and dates for FBI firearms training, the SCPD shall make the final scheduling determination.

(2) The parties shall coordinate safety issues, jurisdictional matters, and other issues through their designated points of contact.

(3) The parties agree that the cost of repair or replacement for damage caused to the bunker shall be the responsibility of the party causing the damage. If the party causing the damage cannot be identified, the SCPD will be responsible for the cost of repair or replacement.

e. Contracting:

(1) All FBI acquisitions and purchasing commitments in support of this agreement shall be made in accordance with applicable Federal Rules and Regulations. No acquisitions may be made without proper authorization from the appropriate FBI and SCPD Contracting Officials.

(2) Only contractors approved by Suffolk County are permitted to perform work. The FBI will submit all contractor's plans and specifications to Suffolk County Department of Public Works (DPW) for approval prior to commencement of work.

(3) The FBI will contract with and pay for the approved contractors directly.

5. FUNDING: The FBI hereby agrees to spend a sum of money not to exceed seventy thousand dollars ($70,000) to refurbish and improve an ammunition bunker located at the Suffolk County Firearms Range.

6. LIABILITY: The parties agree that each party is responsible for the negligent and wrongful acts and omissions by its employees. In addition, the parties agree that should a claim arise under the terms and conditions of the Federal Tort Claims Act (FTCA), Title 28, United States Code, Sections 1346 and 2671 et seq., for the negligent and wrongful act and omission by either parties' employee in the performance of assigned duties, the FBI shall be responsible for the investigation and disposition of said claim. The SCPD agrees to notify the FBI of any administrative claim arising out of an activity conducted pursuant to this MOU. Nothing in this paragraph prevents any party from conducting an independent administrative review of the incident giving rise to the claim; however, final disposition of the claim will be handled as provided herein. Both parties agree to cooperate fully with one another in the event of an official investigation arising from alleged negligence or misconduct arising from acts related to the use of the range. Nothing herein should be construed as supplanting any applicable statute, rule, or regulation.

7. DISCLOSURE AND USE OF INFORMATION: The parties agree that all information provided by the FBI is considered sensitive property of the FBI and that the release of any such information must be approved by the FBI signatory to this MOU or their designee.

8. POINTS OF CONTACT:

a.	FBI -	Special Agent David L. Coletti	(631) 501-8631
b.	SCPD -	Sergeant Jack Ozer	(631) 852-8061

9. SETTLEMENT OF DISPUTES

a. Disagreements between the parties arising under or relating to this MOU will be resolved only by consultation between the parties and will not be referred to a local, state, or federal court.

b. Issues or problems arising under the MOU that cannot be resolved by POCs may be raised by any party, through appropriate channels, to the FBI 's Chief Contracting Officer (CCO), Mr. Anthony J. Bauman at (202) 324-4182, for resolution.

10. SECURITY: It is the intent of the parties that all coordination and support under this MOU will be conducted at the unclassified level. No classified information will be provided or generated under this MOU.

11. AMENDMENT, TERMINATION, ENTRY INTO FORCE, AND DURATION

a. All activities of the parties under this MOU will be carried out in accordance with the terms and conditions of this MOU.

b. Except as otherwise provided, this MOU may be amended by the mutual written consent of the parties' authorized representatives.

c. This MOU may be terminated at any time upon the mutual written consent of the parties. In the event the parties consent to terminate this MOU, the parties will consult prior to the date of termination to ensure termination on the most economical and equitable terms.

d. Any party may terminate this MOU upon 30 days written notification to the other parties. Such notice will be the subject of immediate consultation by the parties to decide upon the appropriate course of action. In the event of such termination, the following rules apply:

(1) The terminating party will continue participation, financial or otherwise, up to the effective date of termination.

(2) Each party will pay the costs it incurs as a result of termination.

(3) All information and rights therein received under the provisions of this MOU prior to the termination will be retained by the parties, subject to the provisions of this MOU.

12. FORCE AND EFFECT

This MOU, which consists of 12 Sections, will enter into effect upon signature of all parties and will remain in effect for five years. It may be extended by mutual written consent of the parties' authorized representatives.

The foregoing represents the understandings reached between the FBI and SCPD upon the matters referred to herein.

FOR THE FEDERAL BUREAU OF INVESTIGATION

Signature

9-1-04
Date

Andrew Arena
Name

Special Agent in Charge
Title

26 Federal Plaza, New York, New York 10278
Location

Signature

Marciann M. Grzadzinski
Contracting Officer
Federal Bureau of Investigation

9.17.04
Date

~~Anthony J. Baumann~~
Name

Chief Contracting Officer
Title

935 Pennsylvania Ave. NW, Washington, D.C. 20535
Location

FOR THE SUFFOLK COUNTY POLICE DEPARTMENT

Signature

07/06/04
Date

Richard Dormer
Name

Commissioner
Title

30 Yaphank Avenue, Yaphank, New York 11980
Location

FOR SUFFOLK COUNTY

Paul Sabatino II
Signature

8/12/2004
Date

Paul Sabatino, II
Name

Chief Deputy County Executive
Title

Suffolk County Executive Office, H. Lee Dennison Building, Hauppauge, New York 11788
Location

Approved As To Legality:
Christine Malafi, Suffolk County Attorney

Signature

7/20/04
Date

By: Basia Deren Braddish
Name

Assistant County Attorney
Title

Suffolk County Law Department, H. Lee Dennison Building, Hauppauge, New York 11788
Location

COUNTY OF SUFFOLK

STEVEN BELLONE
COUNTY EXECUTIVE

EDWARD WEBBER
POLICE COMMISSIONER

POLICE DEPARTMENT
MEMORANDUM

TO: **Jon Schneider, Deputy County Executive**
Suffolk County Executive's Office

FROM: **Mark White, Chief of Support Services**
Suffolk County Police Department

DATE: **June 10, 2014**

SUBJECT: **Resolution Packets & SCIN Forms for the Firearms Bunker Repair Project**

Certificate of Necessity Requested

Attached please find the following for the **Firearms Bunker Repair Project:**

- Draft Grant Resolution
- Proposed Certificate of Necessity
- Memorandum of Support
- Grant SCIN Forms
- Request for Introduction of Legislation
- Financial Impact Statement
- Copy of MOU between the FBI and the SCPD

Electronic copies of the resolution and SCIN forms will be transmitted to CE RESO REVIEW. Grant contract signature will be done on-line in the DCJS Grants Management System (GMS) upon passage and signature of the resolution.

The Federal Bureau of Investigation cannot maintain funding availability without immediate Legislative acceptance, it is imperative that the resolution to accept and appropriate the funding for the project be passed with a Certificate of Necessity at the June 17th meeting in order to secure this funding. Failure to do so will result in the loss of funding.

If you have any questions concerning this resolution package please do not hesitate to contact Susan Krause, Grants Analyst, at (631) 852-6601 or Sarah Furey, Senior Grants Analyst, at (631) 852-6042.

cc: Dennis M. Cohen, Chief Deputy County Executive
Lisa Santeramo, Assistant Deputy County Executive
Tom Vaughn, Director of Intergovernmental Relations
Evelyn Creen, Senior Federal & State Aid Claims Examiner

1609

Intro. Res. No. -2014 Laid on Table 6/17/14

Introduced by Presiding Officer on request of the County Executive

RESOLUTION NO. -2014, AMENDING RESOLUTION 536-2008; 100% GRANT FUNDS FOR IMPROVEMENTS TO HUBBARD COUNTY PARK (CP 7128)

WHEREAS, Appropriating Resolution No. 536-2008 established a new Capital Project Number 7128 "Improvements to Hubbard County Park" and accepted and appropriated funds for a 100% State funded Community Enhancement Facilities Assistance Program Grant; and

WHEREAS, a redistribution of funds is needed for the planning phase of this capital project to develop plans prior to further construction proceeding; and

WHEREAS, there is no net effect on the total cost of the project; and

WHEREAS, it is necessary to amend Resolution No. 536-2008 by deleting $80,000.00 from the construction budget and by adding $80,000.00 to the planning budget; now, therefore, be it

1st **RESOLVED**, that the 4th Resolved clause of Resolution No. 536-2008 is hereby amended by changing the appropriation as follows:

Project Number: 7128
Project Title: Improvements to Hubbard County Park

Project No.	J.C.	Project Title	Amount
525-CAP-7128.110	60	Improvements to Hubbard County Park – Development of a Master Plan for Hubbard County Park	[$130,000] $210,000
525-CAP-7128.310	60	Improvements to Hubbard County Park – Construction – Smithers Lodge	[$375,000] $295,000

and be it further

2nd **RESOLVED**, that this Legislature, being the lead agency under the State Environmental Quality Review Act ("SEQRA"), Environmental Conservation Law Article 8, hereby finds and determines that this action constitutes a Type II action, pursuant to Volume 6 of New York Code of Rules and Regulations ("NYCRR"), the Legislature has no further responsibilities under SEQRA.

[ ] Brackets denote deletion of existing language
__ Underlining denotes addition of new language

Date:

APPROVED BY:

_____
County Executive of Suffolk County

Date of Approval:

1609

STATEMENT OF FINANCIAL IMPACT
OF PROPOSED SUFFOLK COUNTY LEGISLATION

1. Type of Legislation

Resolution ___X___ Local Law _____ Charter Law _____

2. Title of Proposed Legislation

RESOLUTION NO. -2014, AMENDING RESOLUTION 536-2008; 100% GRANT FUNDS FOR IMPROVEMENTS TO HUBBARD COUNTY PARK (CP 7128)

3. Purpose of Proposed Legislation

See above.

4. Will the Proposed Legislation Have a Fiscal Impact? **Yes** __ **No** ___X__

5. If the answer to item 4 is "yes", on what will it impact? (circle appropriate category)

County **Town** **Economic Impact**

Village **School District** **Other (Specify):**

Library District **Fire District**

6. If the answer to item 5 is "yes", Provide Detailed Explanation of Impact

N/A

7. Total Financial Cost of Funding over 5 Years on Each Affected Political or Other Subdivision.

N/A

8. Proposed Source of Funding

100% New York State Community Enhancement Facilities Assistance Program grant (CEFAC).

9. Timing of Impact

Upon adoption

10. Typed Name & Title of Preparer	11. Signature of Preparer	12. Date
Nicholas Paglia Asst Executive Analyst		June 11, 2014

SCIN FORM 175b (10/95)

1609

FINANCIAL IMPACT
2014 PROPERTY TAX LEVY
COST TO THE AVERAGE TAXPAYER

GENERAL FUND

	2014 PROPERTY TAX LEVY	2014 COST TO AVG TAXPAYER	2014 FEV TAX RATE PER $1000
TOTAL	**$0**	**$0.00**	$0.000

POLICE DISTRICT AND DISTRICT COURT

	2014 PROPERTY TAX LEVY	2014 COST TO AVG TAXPAYER	2014 FEV TAX RATE PER $1000
TOTAL	**$0**	**$0.00**	$0.000

COMBINED

	2014 PROPERTY TAX LEVY	2014 COST TO AVG TAXPAYER	2014 FEV TAX RATE PER $1000
TOTAL	**$0**	**$0.00**	$0.000

NOTES:
1) SOURCE FOR NUMBER OF FAMILY PARCELS AND CORRESPONDING ASSESSED VALUATION: SUFFOLK COUNTY REAL PROPERTY, 2012.
2) SOURCE FOR TOTAL TAXABLE ASSESSED VALUATION FOR COUNTY PURPOSES: SCHEDULE A, REPORT OF ASSESSED VALUATION FOR 2012-2013.
3) SOURCE FOR EQUALIZATION RATES: TENTATIVE 2012 COUNTY EQUALIZATION RATES ESTABLISHED BY THE NEW YORK STATE BOARD OF EQUALIZATION AND ASSESSMENTS.

To be completed by the Executive Budget Office

1609

STATEMENT OF FINANCIAL IMPACT
OF PROPOSED SUFFOLK COUNTY LEGISLATION

1. Type of Legislation

Resolution X Local Law _____ Charter Law ____

2. Title of Proposed Legislation

AMENDING RESOLUTION 536-2008; 100% GRANT FUNDS FOR IMPROVEMENTS TO HUBBARD COUNTY PARK (CP 7128)

3. Purpose of Proposed Legislation

See # 2.

4. Will the Proposed Legislation Have a Fiscal Impact? Yes ___ No __X___

5. If the answer to item 4 is "yes", on what will it impact? (circle appropriate category)

County	Town	Economic Impact
Village	School District	Other (Specify):
Library District	Fire District	

6. If the answer to item 5 is "yes", Provide Detailed Explanation of Impact

N/A

7. Total Financial Cost of Funding over 5 Years on Each Affected Political or Other Subdivision.

N/A

8. Proposed Source of Funding

N/A.

9. Timing Impact

N/A

10. Typed Name & Title of Preparer	11. Signature of Preparer	12. Date
Terry Maccarrone Coordinator of Community Based Programs Dept. of Parks, Recreation &Conservation		6/06/2014

COUNTY OF SUFFOLK

1609

STEVEN BELLONE
SUFFOLK COUNTY EXECUTIVE

DEPARTMENT OF
PARKS, RECREATION AND CONSERVATION

GREG DAWSON
COMMISSIONER

2014 INTERGOVERNMENTAL RELATIONS MEMORANDUM OF SUPPORT

TITLE OF BILL: Amending Resolution 536-2008; 100% Grant Funds for Improvements to Hubbard County Park (CP 7128).

PURPOSE OR GENERAL IDEA OF BILL: To amend the prior allocation of funds adopted in Improvements to Hubbard County Park (CP 7128).

SUMMARY OF SPECIFIC PROVISIONS: This resolution amends a portion of the allocation of funding from Construction funds to Planning funds for Improvements to Hubbard County Park (CP 7128).

JUSTIFICATION: This resolution will allow the Department to amend the allocation of prior authorized capital appropriation for Improvements to Hubbard County Park (CP 7128). This is a grant funded project from New York State. A portion of the allocation of funding must be shifted from Construction funding to Planning funding.

FISCAL IMPLICATIONS: There are no fiscal implications related to this resolution.

MONTAUK HIGHWAY – P.O. BOX 144 WEST SAYVILLE, NEW YORK 11796-0144 (631) 854-4949 FAX: (631) 854-4977

SUFFOLK COUNTY PARKS

COUNTY OF SUFFOLK

1609

STEVE BELLONE
SUFFOLK COUNTY EXECUTIVE

DEPARTMENT OF
PARKS, RECREATION AND CONSERVATION

GREG DAWSON
COMMISSIONER

TO: **JON SCHNEIDER, Deputy County Executive**

FROM: **GREG DAWSON, Commissioner**

CC: **DENNIS M. COHEN, Chief Deputy County Executive**
LISA SANTERAMO, Assistant Deputy County Executive
TOM VAUGHN, Director of Intragovernmental Relations

DATE: **June 11, 2014**

RE: **AMEDNING RESOLUTION 536-2008; 100% GRANT FUNDS FOR IMPROVEMENTS TO HUBBARD COUNTY PARK (CP 7128)**

Enclosed please find a draft resolution and supporting documentation relative to the above-captioned. An e-mail version of this resolution was sent to CE RESO REVIEW under the file name "RESO-PKS-Amending Resolution 536-2008; 100% Grant Funds for Improvements to Hubbard County Park (CP 7128).doc."

Should you require anything further, please contact my office at 4-4984.

Enclosures

MONTAUK HIGHWAY – P.O. BOX 144 WEST SAYVILLE, NEW YORK 11796-0144 (631) 854-4949 FAX: (631) 854-4977

SUFFOLK COUNTY PARKS

1610

Intro. Res. No. ____-2014 Laid on Table 6/17/14

Introduced by the Presiding Officer, on request of the County Executive and Legislator Krupski

RESOLUTION NO. -2014, TO APPOINT MEMBER OF SUFFOLK COUNTY YOUTH BOARD COORDINATING COUNCIL REPRESENTING LEGISLATIVE DISTRICT #1 (GWYNN SCHROEDER)

WHEREAS, Section A3-5(E)(1) of the SUFFOLK COUNTY ADMINISTRATIVE CODE provides for the appointment of members of the Suffolk County Youth Board Coordinating Council, including eighteen members representing each of the County's Legislative Districts; and

WHEREAS, Legislator Krupski has recommended that Gwynn Schroeder, currently residing in Cutchogue, NY to be appointed to represent the 1st Legislative District on the Suffolk County Youth Board Coordinating Council; now, therefore be it

1st **RESOLVED**, that, Gwynn Schroeder currently residing in Cutchogue, NY is hereby appointed as a member of the Suffolk County Youth Board Coordinating Council to represent the 1st Legislative District on the Suffolk County Youth Board Coordinating Council for a term of three years commencing on the effective date of this resolution in accordance with Section A3-5(E)(3); and be it further

2nd **RESOLVED,** that this Legislature, being the State Environmental Quality Review Act (SEQRA) lead agency, hereby finds and determines that this resolution constitutes a Type II action pursuant to Section 617.5(c)(20), (21) and/or (27) of Title 6 of the NEW YORK CODE OF RULES AND REGULATIONS (6 NYCRR) and within the meaning of Section 8-0109(2) of the NEW YORK ENVIRONMENTAL CONSERVATION LAW as a promulgation of regulations, rules, policies, procedures, and legislative decisions in connection with continuing agency administration, management and information collection, and the Suffolk County Council on Environmental Quality (CEQ) is hereby directed to circulate any appropriate SEQRA notices of determination of non-applicability or non-significance in accordance with this resolution.

DATED:

APPROVED BY:

_____

Steven Bellone
County Executive of Suffolk County

Date:

1610

SUFFOLK COUNTY LEGISLATURE

Legislator Al Krupski

1st District

Committees
Chairman – Public Works & Energy
Vice Chairman – Environment, Planning & Agriculture
Member – Veterans & Seniors

Boards & Commissions
Agriculture & Farmland Protection Board
Soil & Water Conservation District
Sewer Agency
Space Management Committee
Dredge Project Screening Committee

Okay RAP 3/31/14

March 28, 2014

Roderick A. Pearson
Executive Director
Office of Minority Affairs
H. Lee Dennison Building
Third Floor
Hauppauge, NY 11788

Dear Reverend Pearson,

I would like to recommend Gwynn Schroeder for appointment to the Youth Board Coordinating Council. Gwynn is a member of my staff who has a diverse background and I believe she will serve the Council well. Please see her resume, which is attached.

If you have any question, please do not hesitate to contact me.

Best regards,

Al Krupski

Al Krupski

cc: Presiding Officer DuWayne Gregory
Tim Laube, Clerk of the Legislature

423 Griffing Ave - Suite 2, Riverhead, New York 11901 • (631) 852-3200 • fax (631) 852-3203
email: al.krupski@suffolkcountyny.gov

Gwynn Dickson Schroeder

), Cutchogue, NY 11935

Professional Profile

Non-profit & for profit management experience including:

- Staff recruitment, oversight and management
- Development and execution of budgets
- Bookkeeping
- Payroll management
- Membership relations
- Data base administration
- Volunteer recruitment and management
- Development and execution of fundraising plans & events
- Program development & oversight
- Project/campaign management
- Production of newsletter and other publications
- Adept at Microsoft Office

Advocacy Experience

- Monitored Town Government meetings and work sessions
- Evaluated proposed legislation and existing laws/policy as to environmental implications
- Advised the board of directors in the development of policy
- Executed board policy through writing, public outreach and education and as a spokesperson for a non-profit organization

Professional Accomplishments

- As Operations Manager, started up office for small recruiting firm
- Part of a team which increased membership in non – profit organization by 200% by developing new programs and raising the organization's profile
- As an Registered Nurse, started the medical office for a new substance abuse treatment facility which included developing policies and procedures

Volunteer Activities

- Vice President, North Fork Audubon Society
- Former board member, North Fork Environmental Council
- Former board member, Friends of Long Island Sound

Work History

Legislative Aide	Suffolk County Legislator Al Krupski	February 2013 – Present
Operations Manager Recruiting Firm	Management Recruiters of the North Fork Southold NY	May 2007 – July 2008

Executive Director/ **Southold Coordinator** Environmental Advocacy Org.	North Fork Environmental Council Mattituck, NY	May 1996 – December 2005
Charge Nurse/RN **HIV educator and counselor** In-Patient Substance Abuse Treatment	Long Island Center for Recovery Hampton Bays, NY	January 1994 – November 1995

Education

AAS	Suffolk County Community College, Seldon, NY	May, 1983

References

References are available upon request.

1611

Intro. Res. No. ____-2014 Laid on Table_ 6/17/14

Introduced by the Presiding Officer, on request of the County Executive and Legislator Schneiderman

RESOLUTION NO. -2014, TO APPOINT MEMBER OF SUFFOLK COUNTY YOUTH BOARD COORDINATING COUNCIL REPRESENTING LEGISLATIVE DISTRICT #2 (JASON HANN)

WHEREAS, Section A3-5(E)(1) of the SUFFOLK COUNTY ADMINISTRATIVE CODE provides for the appointment of members of the Suffolk County Youth Board Coordinating Council, including eighteen members representing each of the County's Legislative Districts; and

WHEREAS, Legislator Schneiderman has recommended that Jason Hann, currently residing in Westhampton, NY to be appointed to represent the 2nd Legislative District on the Suffolk County Youth Board Coordinating Council; now, therefore be it

1st **RESOLVED**, that, Jason Hann currently residing in Westhampton, NY is hereby appointed as a member of the Suffolk County Youth Board Coordinating Council to represent the 2nd Legislative District on the Suffolk County Youth Board Coordinating Council for a term of three years commencing on the effective date of this resolution in accordance with Section A3-5(E)(3); and be it further

2nd **RESOLVED,** that this Legislature, being the State Environmental Quality Review Act (SEQRA) lead agency, hereby finds and determines that this resolution constitutes a Type II action pursuant to Section 617.5(c)(20), (21) and/or (27) of Title 6 of the NEW YORK CODE OF RULES AND REGULATIONS (6 NYCRR) and within the meaning of Section 8-0109(2) of the NEW YORK ENVIRONMENTAL CONSERVATION LAW as a promulgation of regulations, rules, policies, procedures, and legislative decisions in connection with continuing agency administration, management and information collection, and the Suffolk County Council on Environmental Quality (CEQ) is hereby directed to circulate any appropriate SEQRA notices of determination of non-applicability or non-significance in accordance with this resolution.

DATED:

APPROVED BY:

_____

Steven Bellone
County Executive of Suffolk County

Date:

1611

OFFICE OF THE COUNTY LEGISLATURE
COUNTY OF SUFFOLK

JAY H. SCHNEIDERMAN
COUNTY LEGISLATOR, 2ND DISTRICT

CHAIRMAN:
PUBLIC WORKS & TRANSPORTATION

COMMITTEES:
BUDGET & FINANCE
VETERANS & SENIORS

February 7, 2014

Mr. Roderick Pearson, Executive Director
Office of Minority Affairs
H. Lee Dennison Building, 3rd Floor
Hauppauge, NY 11788

Dear Mr. Pearson;

Please accept this letter as confirmation of my intention to re-appoint Mr. Jason Hann to the Suffolk County Youth Coordinated Council. I have extended to Mr. Hann, both on my behalf and on your behalf the invitation to join the Council, and he has accepted. For the Council's benefit and the benefit of the Legislature I have provided you with a copy of his resume.

As regards the logistics of the appointment, my staff will ensure that this letter is copied to Mr. Tim Laube, Clerk of the Legislature and to Mr. DuWayne Gregory, Presiding Officer of the Legislature so that they may provide Mr. Hann with an appointment letter.

We are confident that Mr. Hann will be a welcome and effective addition to this vital Youth Council. Please do not hesitate to contact this office directly should you have any additional concerns with respect to this matter.

Sincerely,

Jay H. Schneiderman
Deputy Presiding Officer
Suffolk County Legislator

cc: Mr. DuWayne Gregory, Presiding Officer w/ copy of resume
Mr. Tim Laube, Legislative Clerk w/ copy of resume

75 WASHINGTON STREET ■ P.O. BOX 1827 ■ SAG HARBOR, NEW YORK 11963
(631) 852-8400 FAX: (631) 852-8404

1611

JASON HANN

P.O.Box
Westhampton, NY 11977
Home: (631) /Cellular: (631)

Jason Hann is an organized and detailed oriented professional with strong analytical and time management abilities. With excellent communication and interpersonal skills, Jason is a self-starter who deals effectively in problematic situations and high stress environments. Jason is tech savvy and has extensive work experience with the public and constituent services.

Experience:

Suffolk County Coalition Against Domestic Violence, June 2011 - present
Precinct Advocate

- Provide crisis intervention and advocacy services to victims of domestic violence in the Family & District courts as well as in the Precinct and administrative office
- Assist clients in applying for orders of protection, learning about their rights and options
- Reach out to victims of reported domestic incidents to inform them of services available, provide backup coverage on 24 hour hotline
- Maintain monthly client outcome log, client files and database entries
- Communicate and work successfully with SCPD officers of the Sixth Precinct

Westhampton Care Center, May 2001-July 2011
Dietary Associate

- Responsible for food preparation for residents of the facility

7-11 Inc. - Westhampton, NY, January 2008 – May 2010
Cashier/Customer Service

- Handled sales and assisted customers in making purchases
- Stocked shelves and inventoried merchandise
- Responsible for training new employees store procedures

Education:

Bachelor of Arts, Criminology and Investigations, West Virginia University, December 2009
Regents Diploma, Westhampton Beach High School – Westhampton Beach, NY, June 2002

Activities:

Westhampton Beach St. Patrick Day Parade Committee, September 2010 - present

- Assisted fundraise by securing donations for the annual fund raiser
- Assisted at the fundraiser, helped coordinate events for the parade

References:

Detective Sal Camarda, Suffolk County Police Department, Fourth Precinct. 631-854-8446
Detective Mike Maressa, Suffolk County Police Department, First Precinct. 631-854-8141
Sgt. Todd Berone, Suffolk County Police Department, Sixth Precinct. 631-854-8626
Wendy Linsalata, Suffolk County Coalition Against Domestic Violence, 631-666-7181
Debra Sterling, Suffolk County Coalition Against Domestic Violence, 631-666-7181
Tim Laube, Clerk of the Suffolk County Legislature, 631-853-4074

1612

Intro. Res. No. ____-2014 Laid on Table 6/17/14

Introduced by the Presiding Officer, on request of the County Executive and Legislator Muratore

RESOLUTION NO. -2014, TO APPOINT MEMBER OF SUFFOLK COUNTY YOUTH BOARD COORDINATING COUNCIL REPRESENTING LEGISLATIVE DISTRICT #4 (PHYLLIS HILL)

WHEREAS, Section A3-5(E)(1) of the SUFFOLK COUNTY ADMINISTRATIVE CODE provides for the appointment of members of the Suffolk County Youth Board Coordinating Council, including eighteen members representing each of the County's Legislative Districts; and

WHEREAS, Legislator Muratore has recommended that Phyllis Hill, currently residing in Farmingville, NY to be appointed to represent the 4th Legislative District on the Suffolk County Youth Board Coordinating Council; now, therefore be it

1st **RESOLVED**, that, Phyllis Hill currently residing in Farmingville, NY is hereby appointed as a member of the Suffolk County Youth Board Coordinating Council to represent the 4th Legislative District on the Suffolk County Youth Board Coordinating Council for a term of three years commencing on the effective date of this resolution in accordance with Section A3-5(E)(3); and be it further

2nd **RESOLVED,** that this Legislature, being the State Environmental Quality Review Act (SEQRA) lead agency, hereby finds and determines that this resolution constitutes a Type II action pursuant to Section 617.5(c)(20), (21) and/or (27) of Title 6 of the NEW YORK CODE OF RULES AND REGULATIONS (6 NYCRR) and within the meaning of Section 8-0109(2) of the NEW YORK ENVIRONMENTAL CONSERVATION LAW as a promulgation of regulations, rules, policies, procedures, and legislative decisions in connection with continuing agency administration, management and information collection, and the Suffolk County Council on Environmental Quality (CEQ) is hereby directed to circulate any appropriate SEQRA notices of determination of non-applicability or non-significance in accordance with this resolution.

DATED:

APPROVED BY:

_____

Steven Bellone
County Executive of Suffolk County

Date:

1612

SUFFOLK COUNTY LEGISLATURE

Tom Muratore
Legislator, 4th District
Committees:
Public Works
Transportation & Energy- Vice Chair
Veterans & Seniors- Member
Environment, Planning & Agriculture- Member
Gaming Commission- Member

325 Middle Country Road
Suite 3
Selden, NY 11784
Tel: (631) 854-9292
Fax: (631) 854-9351
E-mail: tom.muratore@suffolkcountyny.gov

April 23, 2014

Reverend Roderick A. Pearson, Executive Director
Suffolk County Office of Minority Affairs
H. Lee Dennison Building
100 Veterans Memorial Highway, Third Floor
P.O. Box 6100
Hauppauge, New York 11788-0099

Dear Reverend Pearson:

Pursuant to §A3-5(E) of the Suffolk County Administrative Code and as Legislator of the 4th Legislative District be advised that I hereby appointed Ms. Phyllis Hill to serve as my representative on the Suffolk County Youth Board Coordinating Council for her initial three (3) year term.

Ms. Hill resides at [illegible], Farmingville, New York 11738. Her home telephone number is 631-[illegible]. Ms. Hill's resume is attached as she ready to serve as an active member the Suffolk County Youth Board Coordinating Council. Ms. Hill should be extended every courtesy due a board member.

If you have any questions, please contact me directly.

Very truly yours,

Tom Muratore,
Legislator, 4th L.D.
Suffolk County Legislature

cc: Timothy Laube, Clerk of the Legislature

Attachment:

Phyllis Hill, AAAHP

ngville, NY 11738

Home (631) ' Cell (516) 9

Adult Education Teacher and Corporate Trainer

Dynamic and motivated Adult Education Teacher and Corporate Trainer with more than 15 years of experience. Expertise in building and developing training programs and solutions for both private corporations and the public school system. Emphasis on aligning corporate initiatives with training needs to deliver outstanding standards of productivity, efficiency, and quality. Excel in developing and presenting subject-appropriate curriculum, detailed-oriented organizer and planner. Ability to deliver instruction in an interesting and clear manner with strong communication skills.

Key areas of experience include:

- Design and develop training programs for the Adult Learner.
- Conduct training need assessment to determine employee performance.
- Facilitate instruction for all levels of employees.
- Create training manuals to enhance the learning process.
- Develop evaluation process to judge performance.
- Coach, mentor and network with administration and management regarding students' progress.
- Present and train all areas of Health Care with a complete knowledge of Managed Care products and services.

Professional Experience

Adult Education Teacher **2001-Present**

Eastern Suffolk BOCES, Bellport, NY

- Pioneered Medical Office Billing and Coding program in order to meet the demand and needs of the growing medical industry.
- Developed curriculum to meet the goals and needs of the adult student and administration.
- Selected vendors for appropriate textbooks and computer programs to build a comprehensive medical billing and coding training program.
- Manage a classroom of 16-25 students while evaluating and assessing the needs of the student.
- Facilitate lessons using open discussions, group projects, self study, and guest speakers.
- Lead teacher with responsilibty to coordinate and supervise additional teachers for consistency of the program.
- Complete knowledge of Medical Terminology, Diagnostics and Procedural Coding, Anatomy, Physiology, Medical Manager Software and Managed Care.
- Received 2008 New York State Education Department's Outstanding Teacher of the Year Award for Adult Education

Senior Claims Analyst **1999-2001**

Medical Doctors of New York-MNDY, Melville, NY

- Analyzed information by the claimants to determine eligibility for benefits while working in a high productive and quality environment.

- Responsible for managing high claim payments of up to $100,000.
- Handled sensitive claim situations and high profile clients.
- Meet and exceeded the needs of claimants, brokers, and clients through letters, phone calls and meetings.
- Worked with internal and external auditors to review and assess various claim situations.

Corporate Trainer **1987-1996**
Metropolitan Life Insurance Company, Hauppauge, NY

- Developed curriculum for new employees, management training, and re-training of existing employees through classroom instructions with the ability to assess the needs of the company.
- Created effective assessment tool for the evaluation of new employees for permanent employment after training.
- Develop daily lesson plans, testing schedules, and compiled reports to upper management regarding progress of new and permanent employees.
- Presented training and informational sessions to all levels of employees in regards to new insurance products.
- Performed various out of state assignments to East Cost claim offices in New York, Delaware, Florida, and South Carolina to provide training and quality for new offices.
- Conducted presentations to clients highlighting software, office tours, and various services.
- Earned multiple Presidential Achievement Awards in 1987, 1991, 1993, and 1995 for outstanding performances.

In addition, as an Adjunct professor for Suffolk Community College from 1987 to 1988, designed a work-study program between MetLife and Hauppauge High School for after graduation employment

Senior Claims Analyst **1981-1987**
Metropolitan Life Insurance, Hauppauge
See MDNY above for job responsibilities

Education **1981**
Associate Degree in Liberal Arts
Suffolk County Community College, Selden, NY

Certification/Professional Development
AAAHP-Certified Medical Billing and Coding
Train the Trainer
Toastmasters

Computer Skills
Microsoft Office (Word, Excel, Power Point)

References
Personal and professional reference available upon request

1613

Intro. Res. No. ____-2014 Laid on Table 6/17/14

Introduced by the Presiding Officer, on request of the County Executive and Legislator Lindsay

RESOLUTION NO. -2014, TO APPOINT MEMBER OF SUFFOLK COUNTY YOUTH BOARD COORDINATING COUNCIL REPRESENTING LEGISLATIVE DISTRICT #8 (BRYAN K. GILL)

WHEREAS, Section A3-5(E)(1) of the SUFFOLK COUNTY ADMINISTRATIVE CODE provides for the appointment of members of the Suffolk County Youth Board Coordinating Council, including eighteen members representing each of the County's Legislative Districts; and

WHEREAS, Legislator Lindsay has recommended that Bryan K. Gill, currently residing in Holbrook, NY to be appointed to represent the 8th Legislative District on the Suffolk County Youth Board Coordinating Council; now, therefore be it

1st **RESOLVED**, that, Bryan K. Gill currently residing in Holbrook, NY is hereby appointed as a member of the Suffolk County Youth Board Coordinating Council to represent the 8th Legislative District on the Suffolk County Youth Board Coordinating Council for a term of three years commencing on the effective date of this resolution in accordance with Section A3-5(E)(3); and be it further

2nd **RESOLVED,** that this Legislature, being the State Environmental Quality Review Act (SEQRA) lead agency, hereby finds and determines that this resolution constitutes a Type II action pursuant to Section 617.5(c)(20), (21) and/or (27) of Title 6 of the NEW YORK CODE OF RULES AND REGULATIONS (6 NYCRR) and within the meaning of Section 8-0109(2) of the NEW YORK ENVIRONMENTAL CONSERVATION LAW as a promulgation of regulations, rules, policies, procedures, and legislative decisions in connection with continuing agency administration, management and information collection, and the Suffolk County Council on Environmental Quality (CEQ) is hereby directed to circulate any appropriate SEQRA notices of determination of non-applicability or non-significance in accordance with this resolution.

DATED:

APPROVED BY:

_____

Steven Bellone
County Executive of Suffolk County

Date:

OFFICE OF THE COUNTY LEGISLATURE
COUNTY OF SUFFOLK

1613

WILLIAM J. LINDSAY III

LEGISLATOR, 8TH DISTRICT

March 13, 2014

Rev. Roderick A. Pearson
H. Lee Dennison Building, Third Floor
Hauppauge, NY 11788

Dear Reverend Pearson,

It is my honor and privilege to appoint Bryan K. Gill as our representative on the Youth Board Coordinating Council for the Eighth Legislative District. Bryan currently resides at in Holbrook, New York, and can be contacted by telephone at 631-) or 631-

Bryan is an outstanding advocate for our community and serves as a great example of how to excel here in Suffolk County. Bryan received his Bachelor of Science degree in Business Administration from Saint Joseph's College in Patchogue in 2006. Bryan then continued his education there and received both his Executive Master's in Business Administration and his Master of Science degree in Management with a concentration in Human Resources in 2010.

Bryan has been employed by Saint Joseph's College in Patchogue since July of 2006. Currently, Bryan is the Director of Student Activities and Co-Curricular Programs, where he serves as Chairperson of the Freshman Year Experience, provides leadership training to student groups and student leaders, and serves on numerous committees that strive to improve campus life for the entire student population at Saint Joseph's College. Bryan also serves as the Director and Coordinator for Intramurals, an Adjunct Lecturer of Physical Education and an Instructor for Continuing Education programs.

I hope you will find Mr. Bryan K. Gill to be a great addition to the Youth Board Coordinating Council. His extensive background of actively advocating for and advising our local youth validates Bryan as an outstanding candidate for this position.

Sincerely,

William J. Lindsay III
County Legislator
cc: Presiding Officer DuWayne Gregory
Clerk of the Legislature Tim Laube

991 MAIN STREET
HOLBROOK, NY 11741

EMAIL: WILLIAM.LINDSAY@SUFFOLKCOUNTYNY.GOV

PHONE (631) 854-9611
FAX (631) 854-9687

Bryan K. Gill

Holbrook, NY 11741
(631)

Education

Executive Master of Business Administration — June 2010
Master of Science in Management — June 2010
Concentration in Human Resources
St. Joseph's College, Patchogue, New York

Bachelor of Science in Business Administration — May 2006
Minor: Accounting
Certificates: Leadership and Supervision, Human Resources Management, Management
St. Joseph's College, Patchogue, New York

Honors

St. Catherine Medal Recipient — 2012

Professional Experience

St. Joseph's College, Patchogue, New York — July 2006-Present

Director of Student Activities and Co-Curricular Programs — January 2014-Present

- Manages daily functions and supervises three staff members and 19 work-study students
- Chairperson to Freshman Year Experience and Co-Chairperson to Student Leadership Experience
- Moderates the Student Government Association, Campus Activities Board and Greek Life
- Chairperson and organizer of the College Advisory Council
- Oversees all student ran activities, leadership trips, calendar dates and clubs and organizations
- Designated official to the Student Activities Fund Account
- Oversees all Orientations (Freshman, Parent, Transfer and New Students) and the Orientation Team
- Consult with faculty award monetary support for co-curricular programming (Cross Roads Project)
- Provides leadership training to all student groups and student leaders
- Serves on the Behavioral Assessment Committee, Search Committee Coordinator and Member, Food Service Committee and Emergency Procedures Committee
- Appointed to serve on the Long Island Campus Retention Steering Committee and Team
- Appointed to the Information Technology Usage Policy and Confidentiality Agreement Committee
- Appointed to serve on the Campus Portal Implementation and Adoption Teams
- Coordinates Textbook Advance, Student, Discrimination and Substance Abuse Handbooks
- Tabulates office budget, timesheets/vacation time and request for disbursements for office
- Collaborates with the Brooklyn Campus staff on various projects
- Streamlines all projects and responsibilities on a continual basis to implement best practices

Director/Coordinator for Intramurals — September 2007-Present

- Supervises a group of student work/study and student volunteers
- Manages, develops and oversees the coordination of all programs, co-sponsoring athletic events and tabulates budget for the department (Budget Officer)
- Collaborates with college departments and student groups

Adjunct Lecturer of Physical Education/Continuing Education Instructor — January 2007-Present

- Instructs classes in Swimming-Advanced Swimming and Swimming Instruction
- Adheres to classroom protocols through grading and examinations
- Utilizes technology and media to increase student learning by maximizing student strengths.

Assistant to the Dean of Students and Student Life — July 2008-December 2013

- Prepared and designed strategic planning initiatives for the Department of Student Life
- Served on various committees and compiled meeting minutes
- Coordinated Textbook Advance, Non-Employee Accident Reports and Health Insurance for Students, Student Handbooks and Discrimination Handbook and Substance Abuse Handbook
- Tabulated office budget, timesheets/vacation time and request for disbursements
- Maintained confidential files and reports on students that attend meetings with the Dean of Students
- Oversaw appointment scheduling and room bookings for the Dean of Students
- Guided the Semester in the City Program – semester housing opportunity on the Brooklyn Campus
- Collaborated with the Brooklyn Campus staff on various projects and tasks
- Streamlined all projects and responsibilities on a continual basis to implement best practices

Sr. Admin. Asst for Student Life/Contact for the Dean of Students September 2006-June 2008

- Communicated with all staff and students, maintained event calendars and detailed projects
- Revised and published all student handbooks and served as Textbook Advance Coordinator
- Moderated ID Photos, updated weekly newsletter and effected positive daily office operations
- Scheduled all appointments and coordinated department staff meetings
- Organized Food Service Committee and Emergency Procedures Committee

Professional Development

Dale Carnegie Training, Hauppauge, New York May 2005-Present

Trainer

- Graduated-Dale Carnegie Course, High Impact Presentations, Leadership Training for Managers
- Mentor to the course graduate assistants/coaches
- Facilitates training for the Dale Carnegie Course: Skills for Success (8 week training)

Volunteer Work

Sts. Philip & James Parish, St. James, New York

Pastoral Council Member (2nd Term)	2009-Present
Catechist/Confirmation Mentor	2010-Present
Extraordinary Minister of Holy Communion	2006-Present

St. Joseph's College Alumni Association, Patchogue, New York

Member-at-Large to the Alumni Association Board	2007-2009, 2013-Present
Alumni Mentoring Program	2007-Present
Alumni Class Agent for Class of 2006	2006-Present
Treasurer of the Alumni Association Board (First Term-Resigned)	2013
Vice-President of the Alumni Association Board (Two Terms)	2009-2013
Co-Chairperson for Annual 5k Run/Walkathon (Race Director)	2007-2012

St. Joseph's College, Patchogue, New York

Wellness Committee	2013-Present
Staff Attire/Fashion Show and BBQ Committees	2011-Present
Annual College Golf Classic Committee Member	2010-Present
Extraordinary Minister of Holy Communion	2006-Present
Council for Arts Member	2005-Present
Danzi Celebration Committee	2003-Present
College Advisory Council Representative/Alternate	2008-2013
Habitat for Humanity Moderator	2007-2013
Graduation Alumni Hooder Coordinator	2006-2013
Orientation Advisor/Facilitator	2006-2013

***Alpha Phi Delta/Delta Psi Omega* Fraternity**

Brother – Xi Class	2005-Present
Moderator	2012-2013
Co-Founder to the Alumni Council	2009
Charity Supervisor/Advisor	2006-2012

Memberships

NIRSA Professional Member (National Intramurals Recreational Sports Association)	2008-Present
NASPA Professional Member (National Association for Student Personal Administrators)	2008-Present
USGA Eagle Club Member (United States Golf Association)	2004-Present

Skills/Certifications

Proficient in Datatel, ASTRA, SharePoint (Portal) and in all Microsoft and Internet/Email Applications

WSI-Water Safety Instructor	2005-Present
Fundamentals of Instructor Training	2005-Present
Lifeguard Training and First Aid	2004-Present
CPR for the Professional Rescuer	2004-Present
AED (Automated External Defibrillator) Training	2004-Present
Preventing Disease Transmission	2004-Present

1614

Intro. Res. No. ____-2014 Laid on Table_ 6/17/14

Introduced by the Presiding Officer, on request of the County Executive and Legislator Martinez

RESOLUTION NO. -2014, TO APPOINT MEMBER OF SUFFOLK COUNTY YOUTH BOARD COORDINATING COUNCIL REPRESENTING LEGISLATIVE DISTRICT #9 (STEPHANY CONTRERAS)

WHEREAS, Section A3-5(E)(1) of the SUFFOLK COUNTY ADMINISTRATIVE CODE provides for the appointment of members of the Suffolk County Youth Board Coordinating Council, including eighteen members representing each of the County's Legislative Districts; and

WHEREAS, Legislator Martinez has recommended that Stephany Contreras, currently residing in Brentwood, NY to be appointed to represent the 9th Legislative District on the Suffolk County Youth Board Coordinating Council; now, therefore be it

1st **RESOLVED**, that, Stephany Contreras currently residing in Brentwood, NY is hereby appointed as a member of the Suffolk County Youth Board Coordinating Council to represent the 9th Legislative District on the Suffolk County Youth Board Coordinating Council for a term of three years commencing on the effective date of this resolution in accordance with Section A3-5(E)(3); and be it further

2nd **RESOLVED,** that this Legislature, being the State Environmental Quality Review Act (SEQRA) lead agency, hereby finds and determines that this resolution constitutes a Type II action pursuant to Section 617.5(c)(20), (21) and/or (27) of Title 6 of the NEW YORK CODE OF RULES AND REGULATIONS (6 NYCRR) and within the meaning of Section 8-0109(2) of the NEW YORK ENVIRONMENTAL CONSERVATION LAW as a promulgation of regulations, rules, policies, procedures, and legislative decisions in connection with continuing agency administration, management and information collection, and the Suffolk County Council on Environmental Quality (CEQ) is hereby directed to circulate any appropriate SEQRA notices of determination of non-applicability or non-significance in accordance with this resolution.

DATED:

APPROVED BY:

_____

Steven Bellone
County Executive of Suffolk County

1614

MONICA R. MARTINEZ
9th LEGISLATIVE DISTRICT

CHAIR
Human Services Committee
VICE-CHAIRPERSON
Education & Information Technology

Member
Budget & Finance
Health
Public Safety

COURTHOUSE CORPORATE CENTER
320 CARLETON AVE, SUITE 4300
CENTRAL ISLIP, NY 11722
P: (631) 853-3700
F: (631) 853-3568
e-mail: Monica.Martinez@suffolkcountyny.gov

February 7, 2014

Mr. Roderick A. Pearson, ED
Office of Minority Affairs
H. Lee Dennison Building, 3rd Flr.
Hauppauge, NY 11787

Re: Youth Board Coordinating Council

Dear Mr. Pearson,

Please accept this letter as my official nomination for Ms. Stephany Contreras to serve as committee member to the Youth Board Coordinating Council Committee for the ninth district. Ms. Contreras is an advocate for the youth. As such, I know she will exemplify great leadership skills while operating in the capacity of a committee member. Stephany Contreras currently resides at: Avenue, Brentwood, NY 11717. She may be reached via telephone at (631) or E-mail

Should you have any questions concerning the same, please do not hesitate to contact my office.

Sincerely,

Monica R. Martinez
Suffolk County Legislator
9th Legislative District

Cc: Honorable DuWayne Gregory, Presiding Officer
Honorable, Timothy Laube, Clerk of the Legislature

Stephany Contreras

, Brentwood, NY 11717 | (631)-

Summary

- Experienced Operations Manager with proven strengths in customer service, sales and negotiations. Demonstrated skills in marketing, advertising, strategic planning and promoting products. Successful in developing strategies to attract new clientele and maintain their loyalty.

Education

BACHELOR | MAY 2015 | QUEENS COLLEGE

- Major: Spanish
- Minor: Secondary Education
- GPA: 3.0

HIGH SCHOOL DIPLOMA | JUNE 2009 | BRENTWOOD HIGH SCHOOL

Highlights

- Bilingual – Proficient in English and Spanish
- Conflict resolution proficiency
- Strong problem solving ability
- Exceptional interpersonal skills
- Devoted to data integrity
- Negotiation competency
- Proficient with Microsoft Office Suite

Experience

OPERATIONS MANAGER | S&B CLOTHING LLC | JUNE 2005 TO PRESENT

- Manage a team of approximately 15 employees in a busy work environment
- Produce operations manuals defining how the business is to be run
- Review financial statements, sales and activity reports, and other performance data to measure productivity and goal achievement and to determine areas needing cost reduction and program improvement
- Determine staffing requirements, interview, hire, train new employees, and oversee personnel processes
- Plan and direct activities such as sales promotions
- Payroll management
- Assist customers by providing information and resolving complaints
- Count money in cash drawers to assure amounts are correct and adequate change is available
- Calculate total payments received during a time period, and reconcile this with total sales
- Keep periodic balance sheets of amounts and numbers of transactions
- Compile and maintain non-monetary reports and records
- Pay company utilities and miscellaneous bills

Intro. Res. No. 1615-2014 Laid on Table 6/17/14

Introduced by the Presiding Officer, on request of the County Executive and Legislator Barraga

RESOLUTION NO. -2014, TO APPOINT MEMBER OF SUFFOLK COUNTY YOUTH BOARD COORDINATING COUNCIL REPRESENTING LEGISLATIVE DISTRICT #11 (ANNMARIE LAROSA)

WHEREAS, Section A3-5(E)(1) of the SUFFOLK COUNTY ADMINISTRATIVE CODE provides for the appointment of members of the Suffolk County Youth Board Coordinating Council, including eighteen members representing each of the County's Legislative Districts; and

WHEREAS, Legislator Barraga has recommended that Annmarie LaRosa, currently residing in West Islip, NY to be appointed to represent the 11th Legislative District on the Suffolk County Youth Board Coordinating Council; now, therefore be it

1st **RESOLVED**, that, Annmarie LaRosa currently residing in West Islip, NY is hereby appointed as a member of the Suffolk County Youth Board Coordinating Council to represent the 11th Legislative District on the Suffolk County Youth Board Coordinating Council for a term of three years commencing on the effective date of this resolution in accordance with Section A3-5(E)(3); and be it further

2nd **RESOLVED,** that this Legislature, being the State Environmental Quality Review Act (SEQRA) lead agency, hereby finds and determines that this resolution constitutes a Type II action pursuant to Section 617.5(c)(20), (21) and/or (27) of Title 6 of the NEW YORK CODE OF RULES AND REGULATIONS (6 NYCRR) and within the meaning of Section 8-0109(2) of the NEW YORK ENVIRONMENTAL CONSERVATION LAW as a promulgation of regulations, rules, policies, procedures, and legislative decisions in connection with continuing agency administration, management and information collection, and the Suffolk County Council on Environmental Quality (CEQ) is hereby directed to circulate any appropriate SEQRA notices of determination of non-applicability or non-significance in accordance with this resolution.

DATED:

APPROVED BY:

_____

Steven Bellone
County Executive of Suffolk County

Date:

1615

SUFFOLK COUNTY

COUNTY LEGISLATURE

THOMAS F. BARRAGA
LEGISLATOR, 11TH DISTRICT

187 SUNRISE HIGHWAY, SUITE C
WEST ISLIP, NEW YORK 11795
(631) 854-4100

April 22, 2014

Mr. Roderick Pearson
Executive Director
Suffolk County Youth Bureau
P.O. Box 6100
Hauppauge, New York 11788

Dear Director Pearson:

I am pleased to write this letter on behalf of Annmarie LaRosa appointing her as the representative for the 11th Legislative District of Suffolk County to the Suffolk County Youth Bureau.

Ms. LaRosa has been a strong advocate for the youth of Suffolk County spending most of her adult life serving the community in the field of education.

As Director/Educator of the South Shore Children's Center located in West Islip she is responsible for day to day operations; developing daily and core curriculum; supervising teachers and teaching assistants and is a liaison between local school districts and the Committee on Preschool Special Education.

Annmarie has served as Vice-President and presently a Trustee on the West Islip School Board and is a member of the New York State School Board Association. She served as Chairperson of the Education Committee; Public Relations Committee; Committee on Special Education and Bully Awareness Committee.

She is a founding member of PAWS, a non-profit organization that raises money and awareness as it relates to education in West Islip and served on the Board of Suffolk County VIBS and the Town of Islip Youth Bureau. She is presently a Board Member of the West Islip Summit Coalition.

I have enclosed a copy of Ms. LaRosa's resume for your review. Given her extensive background, it is an honor for me to appoint Annmarie LaRosa to the Suffolk County Youth Bureau.

Very truly yours,

Thomas F. Barraga
Suffolk County Legislator

TFB:sm
Enclosure

ANNMARIE LAROSA

*West Islip, NY 11795 * home (631) * Cell (631) 7*

SUMMARY

Educator and Business person with excellent communication skills and dynamic interpersonal skills demonstrated by twenty-three years of Education, Business and Volunteer Experience.

CORE QUALIFICATIONS

*Excellent Administrative Management Skills
*Strong Collaborator
*Effectively work with Community Members
*Strong Public Speaking Skills
*Excellent Organizational Skills

PROFESSIONAL EXPERIENCE

DIRECTOR/EDUCATOR ***2000-PRESENT***
South Shore Children's Center
West Islip, New York 2000-2008
East Islip, New York 2008-present

Responsible for the day to day operations of the Center including but not limited to: Creating daily activities associated with curriculum; supervising teachers and teaching assistants; mentoring and modeling best practice in the classroom; effectively communicating with parents; developing core curriculum goals and objectives; Liaison between local school districts and committee on Preschool Special Education.

Accomplishments:

- Increased enrollment by 40% over five years
- Created a continuum for curriculum as it relates to bridging pre-school education with first year public school education
- Created workshops and training programs for Teachers and Teaching Assistants to enhance curriculum and demonstrate best practice in the classroom setting.
- Opened an additional Teaching Center in East Islip in 2008.
- Increased enrollment in East Islip Center by 30% since 2008.

ZONING BOARD OF APPEALS ***2011-2013***
Town Of Islip
Zoning Board Member
*Assess and determine property zoning appeals within Islip Township. Adjudicate zoning issues and resolve conflict.

EDUCATOR ***1991 – 2000***
Elmont Union Free School District
Elmont, New York
*Tenured classroom teacher N-6. Responsible for implementation of grade specific curriculum, using a variety of methods, materials and best practices as dictated by the institution. Supervised student teachers from a variety of institutions including Hofstra University, Adelphi University and SUNY Old Westbury

Accomplishments:

- Managed early childhood learning center that resulted in a learning environment of excellence
- Created early childhood core curriculum targeting a differentiated and engaging educational experience
- Designed, developed and implemented daily lesson plan
- Developed thematic, learning activities that resulted in positive skill building for the early learner
- Created collaborative classroom experience through center-based instruction

ANNMARIE LAROSA

*West Islip, NY 11795 * home (631) * Cell (631)*

- Tailored educational curriculum to students with range of learning styles, disabilities, strengths and weaknesses
- Developed innovative semester lesson plans and practical application exercises for the classroom experience
- Regularly met with parents to discuss student issues and course weakness areas
-

PROFESSIONAL SERVICE AND AFFILIATIONS

West Islip Board of Education *2008- PRESENT*
Trustee and Vice- President
New York State School Board Association

Activities and Accomplishments:

- Chairperson of the Education Committee
- Chairperson of the Public Relations Committee
- Chairperson of the Committee on Special Education
- Chairperson of the Bully Awareness Committee

Partners Advancing West Islip Students (PAWS) *2006-PRESENT*
Trustee and Founding Member

Founding member of PAWS, a non-profit organization raising money and awareness as it relates to Education in West Islip. PAWS provides technology and resources that the school district could not otherwise afford through fundraising and grant writing.

Activities and Accomplishments:

- Assisted in the creation of the organization's Mission, Vision and Values
- Assisted in the creation of the organization's current structure
- Served as the organization's Vice- President
- Created Granting process
- Assist in fundraising efforts which raise between 30K and 50K per year
- Assist in Grant writing efforts, accumulating over $100K in State Grants to date
- Continue to serve in an advisory capacity as a founding member

Victims Information Bureau of Suffolk County (VIBS) *2010-2013*
Board Member
Town of Islip Youth Bureau *2010-2013*
Board Member
West Islip Summit Coalition *2010-PRESENT*
Board Member

EDUCATION

STONY BROOK UNIVERSITY
Master of Science *1994*
Education

SUNY Old Westbury
Bachelor of Arts *1989*
Education

Permanent Certification, Elementary Education, N-6, New York

REFERENCES AVAILABLE UPON REQUEST

1616

Intro. Res. No. ____-2014 Laid on Table 6/17/14

Introduced by the Presiding Officer, on request of the County Executive and Legislator Hahn

RESOLUTION NO. -2014, TO APPOINT MEMBER OF SUFFOLK COUNTY YOUTH BOARD COORDINATING COUNCIL REPRESENTING LEGISLATIVE DISTRICT #5 (ALYSSA TURANO)

WHEREAS, Section A3-5(E)(1) of the SUFFOLK COUNTY ADMINISTRATIVE CODE provides for the appointment of members of the Suffolk County Youth Board Coordinating Council, including eighteen members representing each of the County's Legislative Districts; and

WHEREAS, Legislator Hahn has recommended that Alyssa Turano, currently residing in Setauket, NY to be appointed to represent the 5th Legislative District on the Suffolk County Youth Board Coordinating Council; now, therefore be it

1st **RESOLVED**, that, Alyssa Turano currently residing in Setauket, NY is hereby appointed as a member of the Suffolk County Youth Board Coordinating Council to represent the 5th Legislative District on the Suffolk County Youth Board Coordinating Council for a term of three years commencing on the effective date of this resolution in accordance with Section A3-5(E)(3); and be it further

2nd **RESOLVED,** that this Legislature, being the State Environmental Quality Review Act (SEQRA) lead agency, hereby finds and determines that this resolution constitutes a Type II action pursuant to Section 617.5(c)(20), (21) and/or (27) of Title 6 of the NEW YORK CODE OF RULES AND REGULATIONS (6 NYCRR) and within the meaning of Section 8-0109(2) of the NEW YORK ENVIRONMENTAL CONSERVATION LAW as a promulgation of regulations, rules, policies, procedures, and legislative decisions in connection with continuing agency administration, management and information collection, and the Suffolk County Council on Environmental Quality (CEQ) is hereby directed to circulate any appropriate SEQRA notices of determination of non-applicability or non-significance in accordance with this resolution.

DATED:

APPROVED BY:

_____

Steven Bellone
County Executive of Suffolk County

Date:

1616

COUNTY OF SUFFOLK

KARA HAHN
LEGISLATOR, FIFTH DISTRICT

COMMITTEE CHAIR
ENVIRONMENT, PLANNING
& AGRICULTURE

VICE-CHAIR
PARKS & RECREATION

MEMBER
GOVERNMENT OPERATIONS,
PERSONNEL, HOUSING &
CONSUMER PROTECTION
PUBLIC SAFETY
ECONOMIC DEVELOPMENT
& ENERGY

COUNTY LEGISLATURE

February 11, 2014

Tim Laube, Clerk of the Legislature
William H. Rogers Building
Hauppauge, New York

Dear Mr. Laube:

I am writing to formally notify you that I am appointing Alyssa Turano to the Suffolk County Youth Board Coordinating Council as my designee for the 5th Legislative District.

If you need any additional information about this member, please do not hesitate to contact me.

Sincerely,

Kara Hahn
Suffolk County Legislator
Fifth District

306 MAIN STREET
PORT JEFFERSON, NEW YORK 11777

KARA.HAHN@SUFFOLKCOUNTYNY.GOV

PHONE: (631) 854-1650
FAX: (631) 854-1653

Alyssa Turano

Address: l, Setauket, NY 11733
Phone Number: (631)
Email:

RELEVANT EXPERIENCE

Legislative Aide **February 2012-Present**
Suffolk County Legislature- Legislator Kara Hahn, Port Jefferson, NY

- Develop and implement policy objectives, propose strategies pass proposed legislation; and advising on political and community issues
- Liaise, maintain relationships for and represent the Legislator with all levels of government including Federal, State and Town as well as civic organizations, chambers of commerce, community organizations and constituents

Assistant Campaign Manager **July 2011- Present**
Kara Hahn Suffolk County Legislature, Setauket, NY

- Organize and correspond with volunteers, create literature, organize Kara's calendar, in charge of mailings, organized fundraisers and rallies.

Food Policy Council **October 2012-Present**
Secretary, Hauppauge, NY

- Create and disseminate agendas for each meeting
- Keep the records of whose a Council Member and arrange for new members to be appointed if necessary
- Take minutes at every meeting and distribute an annotated agenda after each meeting

High Point University, Office of Annual Giving **September 2009 – May 2011**
Phone-A-Thon Caller, High Point, NC

- Utilize strong interpersonal communication and persuasive speaking abilities in calling alumni/parents explaining the benefits of the University and asking for donations/gifts to the University

High Point University **January 2008 – December 2009**
Office Assistant, High Point, NC

- Served as a valuable team member in assisting professors with a variety of administrative office procedures in including handling records, making photocopies, etc.

EDUCATION

High Point University, High Point, NC **May 2011**
B.A., **French**
B.A., **International Studies**
Pi Delta Phi – National French Honor Society **2008**
Phi Sigma Iota – International Foreign Language Honor Society **2008**

VOLUNTEER EXPERIENCE

Stony Brook Train Station Annual Spring and Fall Cleanup **October 2011-Present**
Secured plants donated for the cleanups and oversaw volunteers
Walk for Beauty Committee **May 2012-Present**
Committee member- handed out fliers for the event and organized volunteers the during the event

ACCOLODES

National Association of Counties Achievement Award **July 2013**
For contributing to the Suffolk County Sheriff's Youth Re-entry Task Force
East End Democratic Women, Woman of Distinction Award **February 2012**
For work on Suffolk County Legislator Kara Hahn's 2011 campaign
R. Sherman Young Historian Award **2006**
For outstanding contributions to the Three Village Historical Society by a young person

OFFICE OF THE SUFFOLK COUNTY LEGISLATURE

Sarah S. Anker

Suffolk County Legislator, 6th District
Committees:
Chairwoman of Education & Information Technology • Vice Chairwoman of Budget and Finance
Veterans & Seniors • Environment, Planning and Agriculture

March 7, 2014

Roderick A. Pearson
Executive Director
Office of Minority Affairs
H. Lee Dennison Building
Third Floor,
Hauppauge, NY 11788

Dear Mr. Pearson,

It is my honor and privilege to appoint Miller Place resident Janene Gentile to the Suffolk County Youth Board Coordinating Council.

Ms. Gentile has been the Executive Director of the North Shore Youth Council since 1993, where she has implemented innovative youth, family and community social program materials to support anti-violence, drug and alcohol-free initiatives. For more than 20 years, Janene has been a moving force in the community, working to ensure that the safety and wellness of the children in the Rocky Point, Miller Place, Mount Sinai, and Shoreham-Wading River School Districts.

Janene strives to create a community that our youth can be proud of. Some of Janene's many youth initiatives include a movement for artistic murals throughout the north shore in an effort to prevent graffiti and to encourage the artistic talents of local students, "Big Buddy-Little Buddy" mentorship programs, and assisting military veterans with finding education and employment opportunities.

Janene Gentile is truly an asset to our community and I am proud to appoint her to the Suffolk County Youth Board Coordinating Council. I have attached Ms. Gentile's resume and contact information to this letter. Please don't hesitate to contact my office at 631-854-1600 if you have any questions.

Sincerely,

Sarah S. Anker
Suffolk County Legislator
Sixth District

SA/kt

CC:
Presiding Officer Gregory, Suffolk County Legislature
Tim Laube, Clerk of the Legislature

620 Route 25A, Suite B, Mt. Sinai, NY 11766 • 631-854-1600 • Fax 631-854-1603
Sarah.Anker@suffolkcountyny.gov

1617

Intro. Res. No. ____-2014 Laid on Table 6/17/14

Introduced by the Presiding Officer, on request of the County Executive and Legislator Kennedy

RESOLUTION NO. -2014, TO APPOINT MEMBER OF SUFFOLK COUNTY YOUTH BOARD COORDINATING COUNCIL REPRESENTING LEGISLATIVE DISTRICT #12 (BRITTANY BIENEMANN)

WHEREAS, Section A3-5(E)(1) of the SUFFOLK COUNTY ADMINISTRATIVE CODE provides for the appointment of members of the Suffolk County Youth Board Coordinating Council, including eighteen members representing each of the County's Legislative Districts; and

WHEREAS, Legislator Kennedy has recommended that Brittany Bienemann, currently residing in Smithtown, NY to be appointed to represent the 12th Legislative District on the Suffolk County Youth Board Coordinating Council; now, therefore be it

1st **RESOLVED**, that, Brittany Bienemann currently residing in Smithtown, NY is hereby appointed as a member of the Suffolk County Youth Board Coordinating Council to represent the 12th Legislative District on the Suffolk County Youth Board Coordinating Council for a term of three years commencing on the effective date of this resolution in accordance with Section A3-5(E)(3); and be it further

2nd **RESOLVED,** that this Legislature, being the State Environmental Quality Review Act (SEQRA) lead agency, hereby finds and determines that this resolution constitutes a Type II action pursuant to Section 617.5(c)(20), (21) and/or (27) of Title 6 of the NEW YORK CODE OF RULES AND REGULATIONS (6 NYCRR) and within the meaning of Section 8-0109(2) of the NEW YORK ENVIRONMENTAL CONSERVATION LAW as a promulgation of regulations, rules, policies, procedures, and legislative decisions in connection with continuing agency administration, management and information collection, and the Suffolk County Council on Environmental Quality (CEQ) is hereby directed to circulate any appropriate SEQRA notices of determination of non-applicability or non-significance in accordance with this resolution.

DATED:

APPROVED BY:

_____

Steven Bellone
County Executive of Suffolk County

1617

SUFFOLK COUNTY LEGISLATURE

COUNTY OF SUFFOLK

JOHN M. KENNEDY, JR.
LEGISLATOR, 12TH DISTRICT
CHAIRMAN
REPUBLICAN CAUCUS

COMMITTEES
WAYS AND MEANS
PUBLIC SAFETY
ECONOMIC DEVELOPMENT
BUDGET & FINANCE

April 25, 2014

Roderick Pearson
Executive Director
Suffolk County Youth Services
P.O. Box 6100
100 Veterans Memorial Hwy
Hauppauge , NY 11787

Re: Brittany Bienemann

Dear Roderick Pearson:

I write today to recommend Brittany Bienemann as the 12th Legislative District appointee to the Suffolk County Youth Board Coordinating Council. Brittany has been an outstanding member of the Smithtown community, having served as a Volunteer for the Smithtown Kickers Special Soccer, participating in the Relay for Life raising money for the American Cancer Society and interning at my Legislative office

In addition to her extensive community service, Ms. Bienemann is very active in school as a member of the Smithtown High School West Varsity Girls' Soccer Team serving as Team Captain. Furthermore, Brittany has earned high honors in the National, Spanish, Math Honor Societies.

Ms. Bienemann is an outstanding example of an accomplished young person, loving daughter and sister, and a committed young prodigy, willing to work on behalf of the issues that confront all Suffolk County Youth every day. I am honored to recommend her as my appointee to the Suffolk County Youth Board Coordinating Council.

Sincerely,

John M. Kennedy, Jr.

725 VETERANS MEMORIAL HIGHWAYAY, BUILDING 17 • HAUPPAUGE, NY 11788 • TELEPHONE (631) 854-3735 • FAX (631) 854-3744
MAILING ADDRESS: PO BOX 6100 • HAUPPAUGE, NY 11788
E-MAIL: JOHN.KENNEDY@SUFFOLKCOUNTYNY.GOV
FACEBOOK.COM/JOHNMKENNEDYJR

Brittany Bienemann

Smithtown, NY 11787 • Phone: 631- • E-mail:

Academics

- GPA: 4.09, SAT: 2040, ACT: 32
- 2013-2014, 11th Grade: AP US History, Honors Intro to Calculus, AP Language & Composition, AP Physics, Select Symphonic Band
- 2012-2013, 10th Grade: AP World History, Honors Algebra II and Trigonometry, Honors English 10, AP Biology, Select Symphonic Band
- 2011-2012, 9th Grade: Pre-AP World History, Honors Geometry, Honors English 9, Honors Earth Science, Concert Band

Awards

- Certificate for Merit: Outstanding Performance on the 2013 Suffolk County Mathematics Contest
- Smithtown HS West Business Award: For outstanding performance in Intro to Business
- All- League Player Award: For my performance during the varsity soccer season
- All- Conference Player Award: For my performance during the varsity soccer season
- Outstanding Performance Rating on trumpet solo at the NYSSMA Festival '12, '13, '14

School Clubs

- National Honor Society '14
- Spanish Honor Society '13, '14
- Math Honor Society '14
- Brass Ensemble '12, '13, '14
- Junior Class Council '13, '14

Community Service

- Smithtown Kicks Special Soccer Volunteer
- Participated in Relay for Life and Raised money for the American Cancer Society
- Intern for Suffolk County Legislator John M. Kennedy Jr.

Athletics

- SHS West Varsity Girl's Soccer 2011- Present: Team Captain 2013-2014
- Brentwood SC Pride 97 2013- Present
- Smithtown Kickers Fire 2008- 2013
- Long Island Rough Riders U16 Team 2010-2014: Team Captain 2011-2014, Trained and played in Italy, Germany, Austria, and Spain

1618

Intro. Res. No. ____-2014 Laid on Table 6/17/14

Introduced by the Presiding Officer, on request of the County Executive and Legislator Trotta

RESOLUTION NO. -2014, TO APPOINT MEMBER OF SUFFOLK COUNTY YOUTH BOARD COORDINATING COUNCIL REPRESENTING LEGISLATIVE DISTRICT #13 (DEBORAH DELANEY)

WHEREAS, Section A3-5(E)(1) of the SUFFOLK COUNTY ADMINISTRATIVE CODE provides for the appointment of members of the Suffolk County Youth Board Coordinating Council, including eighteen members representing each of the County's Legislative Districts; and

WHEREAS, Legislator Trotta has recommended that Deborah Delaney, currently residing in Kings Park, NY to be appointed to represent the 13th Legislative District on the Suffolk County Youth Board Coordinating Council; now, therefore be it

1st **RESOLVED**, that, Deborah Delaney currently residing in Kings Park, NY is hereby appointed as a member of the Suffolk County Youth Board Coordinating Council to represent the 13th Legislative District on the Suffolk County Youth Board Coordinating Council for a term of three years commencing on the effective date of this resolution in accordance with Section A3-5(E)(3); and be it further

2nd **RESOLVED,** that this Legislature, being the State Environmental Quality Review Act (SEQRA) lead agency, hereby finds and determines that this resolution constitutes a Type II action pursuant to Section 617.5(c)(20), (21) and/or (27) of Title 6 of the NEW YORK CODE OF RULES AND REGULATIONS (6 NYCRR) and within the meaning of Section 8-0109(2) of the NEW YORK ENVIRONMENTAL CONSERVATION LAW as a promulgation of regulations, rules, policies, procedures, and legislative decisions in connection with continuing agency administration, management and information collection, and the Suffolk County Council on Environmental Quality (CEQ) is hereby directed to circulate any appropriate SEQRA notices of determination of non-applicability or non-significance in accordance with this resolution.

DATED:

APPROVED BY:

_____

Steven Bellone
County Executive of Suffolk County

Date:

1618

OFFICE OF THE COUNTY LEGISLATURE
COUNTY OF SUFFOLK

ROBERT TROTTA
LEGISLATOR, 13TH DISTRICT

59 LANDING AVENUE
SMITHTOWN, NY 11787
(631) 854-3900
FAX (631) 854-3903
e-mail: Robert.Trotta@suffolkcountyny.gov

March 27, 2014

The Honorable DuWayne Gregory
Presiding Officer
Suffolk County Legislature
P.O. Box 6100
Hauppauge, New York 11788-0099

Dear Presiding Officer Gregory:

As the legislator for the 13th Legislative District, I would like to appoint Debbie Danley of in Kings Park as my representative to serve on the Suffolk County Youth Board.

Ms. Danley is Executive Director of Kings Park in the kNOw and is a former president of the Fort Salonga PTA. I believe that her background and experience with our youth and with her local school district will make her an asset to the Board. Her resume is attached.

Thank you for your attention to this request.

Sincerely,

Robert Trotta
Suffolk County Legislator
13th Legislative District

CC: Tim Laube, Clerk of the Legislature
Rev. Roderick Pearson
Debbie Danley

RT: see

Attachment (1)

DEBORAH L. DANLEY
1 Commack Road
Kings Park, NY 11754
631

SUMMARY

To serve as a board member where I can utilize my passion for our community and youth to ensure Suffolk County offers cost effective, creative opportunities for our youngest residents.

EXPERIENCE

Executive Director, Kings Park in the kNOw **2008 – Present**

- Responsibilities include organizing monthly meetings, managing the budget and fundraising
- Host community and youth events, working with our local school district, residents and businesses with a goal of keeping our children and our town drug-free
- Work with law enforcement officials, collect anonymous tips and work to eradicate illegal drugs

Vice President Kings Park School District Council of Schools **2010-2012**

- Responsibilities include overseeing work of specific committees
- United different Parent-Teacher Associations with a purpose of working together, sharing resources and creative ideas
- Attend training and workshops
- Organizing fundraising events
- Host student and family activities
- Act as an aide to the president, report to membership and work with administrators, students and families within the confines of organization's By-Law

President, Fort Salonga PTA **2008 -2012**

- Responsibilities include coordinating and presiding over monthly meetings
- Construct budget and proposed annual budget vote
- Attend training and workshops and organize fundraising events
- Hosts student and family activities
- Coordinate efforts of Executive Board, report to membership and work with administration, students and families within the confines of organization's By-Laws

EDUCATION

- Associates Degree, Suffolk County Community College 1994-1997
- Regents High Scho9l Diploma, St. John the Baptist High School

1619

Intro. Res. No. ____-2014 Laid on Table 6/17/14

Introduced by the Presiding Officer, on request of the County Executive and Legislator Spencer

RESOLUTION NO. -2014, TO APPOINT MEMBER OF SUFFOLK COUNTY YOUTH BOARD COORDINATING COUNCIL REPRESENTING LEGISLATIVE DISTRICT #18 (REVEREND DR. LARRY WASHINGTON)

WHEREAS, Section A3-5(E)(1) of the SUFFOLK COUNTY ADMINISTRATIVE CODE provides for the appointment of members of the Suffolk County Youth Board Coordinating Council, including eighteen members representing each of the County's Legislative Districts; and

WHEREAS, Legislator Spencer has recommended that Reverend Dr. Larry Washington, currently residing in Huntington, NY to be appointed to represent the 18th Legislative District on the Suffolk County Youth Board Coordinating Council; now, therefore be it

1st **RESOLVED**, that, Reverend Dr. Larry Washington currently residing in Huntington, NY is hereby appointed as a member of the Suffolk County Youth Board Coordinating Council to represent the 18th Legislative District on the Suffolk County Youth Board Coordinating Council for a term of three years commencing on the effective date of this resolution in accordance with Section A3-5(E)(3); and be it further

2nd **RESOLVED,** that this Legislature, being the State Environmental Quality Review Act (SEQRA) lead agency, hereby finds and determines that this resolution constitutes a Type II action pursuant to Section 617.5(c)(20), (21) and/or (27) of Title 6 of the NEW YORK CODE OF RULES AND REGULATIONS (6 NYCRR) and within the meaning of Section 8-0109(2) of the NEW YORK ENVIRONMENTAL CONSERVATION LAW as a promulgation of regulations, rules, policies, procedures, and legislative decisions in connection with continuing agency administration, management and information collection, and the Suffolk County Council on Environmental Quality (CEQ) is hereby directed to circulate any appropriate SEQRA notices of determination of non-applicability or non-significance in accordance with this resolution.

DATED:

APPROVED BY:

_____

Steven Bellone
County Executive of Suffolk County

Date:

1619

SUFFOLK COUNTY LEGISLATURE
COUNTY OF SUFFOLK

WILLIAM R. SPENCER, M.D.
LEGISLATOR 18TH DISTRICT

CHAIR
HEALTH COMMITTEE

VICE-CHAIR
GOVERNMENT OPERATIONS, PERSONNEL, HOUSING, & CONSUMER PROTECTION COMMITTEE

MEMBER
PUBLIC SAFETY COMMITTEE

15 PARK CIRCLE, SUITE 209
CENTERPORT, N.Y.
11721

PHONE: (631) 854-4500
FAX: (631) 854-4503

E-MAIL: william.spencer@suffolkcountyny.gov
WEBSITE: http://legis.suffolkcountyny.gov/do/do18/do18.html

June 4, 2014

Mr. Roderick Pearson, Executive Director
Suffolk County Youth Board
PO Box 6100
Hauppauge, NY 11788

Dear Mr. Pearson,

Please allow me to introduce Reverend Dr. Larry Washington as a potential candidate to fill the vacancy on the Suffolk County Youth Board. You will see by his resume, which is enclosed, that he has spent an inordinate amount of time working with young people. Without equivocation, I would like to recommend him as my representative to the Youth Board.

Thank you for your attention to this letter. Please feel free to call me if you have any questions.

Sincerely,

William R. Spencer, M.D.
Suffolk County Legislator
18th Legislative District

WRS:lmg

Reverend Dr. Larry Washington

Huntington, New York, 11743

(631) Home or (631)

SUMMARY

Highly skilled **Director** of community programs with two decades of experience and **Pastor** servicing a congregation of 500 members.

SKILLS AND ABILITIES

Direct and supervise public religious instruction.
Conduct individual and group counseling for youth and adults in all areas of life skills and financial planning.
Direct and oversee the duties and responsibilities of all officers of the church.
Responsible for accounting and distribution of payroll, petty cash and other major expenditures.
Hired, trained and supervised staff for the Town of Huntington youth programs
Functioned as liaison between the community and college enrichment programs
Developed a town-wide council of agencies and school district personnel to encourage, foster and coordinate mentoring programs in Huntington.
Performed needs assessment focus groups with various segments of the community.
Provided case management services to elementary age children.
Responsible for proposal development and grant writing.

PROFESSIONAL EXPERIENCE

Pastor-Evergreen Missionary Baptist Church (Huntington, NY) **1986-Present**

Director/Coordinator- Town of Huntington (Huntington, NY)

- **Director of College Enrichment** **1997-1999**
- **Coordinator of Mentoring Services/Youth Worker** **1997-1998**
- **Prevention Specialist/Project PACE** **1994-1997**

Director-Project Upward Bound (New York) **1977-1991**

1990-1991	Dowling College, Oakdale, New York
1989-1990	Queens College, Flushing, New York
1977-1984	Dowling College, Oakdale, New York

EDUCATION

Master of Theological Studies, 2005- Faith Evangelical Lutheran Seminary (Tacoma, Washington)
Honorary Doctorate of Divinity, 1990- National Theological Seminary (St. Louis, Missouri)
Masters of Elementary Education, 1981- Dowling College (Oakdale, New York)
Bachelors of Science, 1976- Xavier University (New Orleans, Louisiana)
Public School Teacher Certificate-University of the State of New York (New York)

Affiliations

Huntington Station Enrichment Center, Board of Directors and Chairman of Advisory Board since 1993.

NAACP, Huntington branch, Member since 1977.

NAACP, Life Member.

Alpha Phi Alpha Fraternity, Eta Theta Lambda Chapter, Member since 1982.

Honorable order of the Masons, David W. Parker Lodge No. 72, member since 1972

Interdenominational Black Clergy of Huntington, Vice President since 1996.

Eastern Baptist Association, Member since 1969-

Vice Moderator for the Suffolk County branch.

Executive Board Member of the Black and Hispanic Democratic Party of Suffolk County.

National Baptist Convention, Member since 1987.

International Federation of Christian Chaplains,Inc.

1620

Intro. Res. No. -2014 Laid on Table 6/17/14

Introduced by Presiding Officer on request of the County Executive

RESOLUTION NO. -2014, ADOPTING LOCAL LAW NO. -2014, A LOCAL LAW TO AMEND, UPDATE AND REORGANIZE CHAPTER 528 OF THE SUFFOLK COUNTY CODE TO INCORPORATE CHANGES ADOPTED BY THE STATE AND TO FACILITATE CONTINUING ADVANCEMENTS AND MODIFICATIONS OF THE LAW IN THE FUTURE

WHEREAS, there was duly presented and introduced to this County Legislature at a regular meeting held on , 2014, a proposed local law entitled, " **A LOCAL LAW TO AMEND, UPDATE AND REORGANIZE CHAPTER 528 OF THE SUFFOLK COUNTY CODE TO INCORPORATE CHANGES ADOPTED BY THE STATE AND TO FACILITATE CONTINUING ADVANCEMENTS AND MODIFICATIONS OF THE LAW IN THE FUTURE**;" and said local law in final form is the same as when presented and introduced; now, therefore be it

RESOLVED, that said local law be enacted in form as follows:

LOCAL LAW NO. -2014, SUFFOLK COUNTY, NEW YORK

A LOCAL LAW TO AMEND, UPDATE AND REORGANIZE CHAPTER 528 OF THE SUFFOLK COUNTY CODE TO INCORPORATE CHANGES ADOPTED BY THE STATE AND TO FACILITATE CONTINUING ADVANCEMENTS AND MODIFICATIONS OF THE LAW IN THE FUTURE

BE IT ENACTED BY THE COUNTY LEGISLATURE OF THE COUNTY OF SUFFOLK, as follows:

Section 1. Legislative Intent.

The Suffolk County Legislature hereby finds and determines that in the County of Suffolk, with its diverse population, there is no greater danger to the health, safety, and welfare of the County and its inhabitants than the existence of groups and individuals reflecting prejudice and antagonism toward each other because of actual or perceived differences.

The Legislature also finds that prejudice and discrimination creates economic instability by limiting individuals' access to quality education, health care, housing and job opportunities.

The Legislature further finds and declares that acts of prejudice, intolerance, bigotry, and discrimination deny opportunities to persons, threaten the fundamental rights and privileges of the inhabitants of the County of Suffolk and undermine the foundations of a free democratic state and the economic stability of the region.

The Legislature further declares it to be the public policy of the County of Suffolk to eliminate and prevent discrimination and to safeguard the right of every person to live and work in Suffolk County without regard to actual or perceived race, color, creed, gender, alienage or citizenship status, disability, familial status, marital status, military status, sexual orientation, age, national origin, income source or status as a victim of domestic violence.

Therefore, the purpose of this law is to update the Suffolk County Human Rights Law to include a comprehensive administrative process, to incorporate changes adopted by the State, to reorganize the Suffolk County law in an effort to make it more user-friendly, to ensure that prejudice, intolerance, bigotry and discrimination will not threaten the rights of Suffolk County inhabitants and to promote the principles of equality and inclusion.

Section 2. Amendments.

Article II of Chapter 528 of the SUFFOLK COUNTY CODE is hereby deleted in its entirety and replaced with the following:

Chapter 528
HUMAN RIGHTS
***

Article II. Unlawful Discriminatory Acts.

§ 528-5. Policy.

Each year a number of Suffolk County residents are subject to incidents of violence and other acts of prejudice committed in Suffolk County based upon actual or perceived differences, including those based on race, color, gender, creed, national origin, age, alienage or citizenship status, sexual orientation, disability, marital status, familial status, military status, source of income, or status as a victim of domestic violence. Such acts of prejudice, intolerance, bigotry, discrimination, and disorder threaten the rights and proper privileges of the County's inhabitants and create a danger to the health, safety and welfare of the County and its inhabitants. Therefore, the purpose of this Article is to create a mechanism to eliminate and prevent discrimination from playing any role in actions that occur within Suffolk County relating to employment, public accommodations, housing and other real estate, and to take other actions against prejudice, intolerance, bigotry, discrimination and bias-related violence or harassment.

§ 528-6. Definitions.

As used in this Article, the following terms shall have the meanings indicated:

AGENT

Any person or entity, whether or not for financial consideration, with the authority to engage in any act on behalf of an employer or property owner, or other person or entity in control of such accommodation. The term "agent" shall include, but not be limited to, a real estate salesperson or real estate broker.

ALIENAGE OR CITIZENSHIP

A. The citizenship of any individual; or

B. The immigration status of any individual legally eligible to be employed within the United States and who is not a citizen or national thereof.

COMMERCIAL SPACE

Any space in a building, structure, or portion thereof which is used or occupied or is intended, arranged or designed to be used or occupied for the manufacture, sale, resale, processing, reprocessing, displaying, storing, handling, garaging or distribution of personal property; and any space which is used or occupied, or is intended, arranged or designed to be used or occupied, as a separate business or professional unit or office in any building, structure or portion thereof.

COMMISSION

The Suffolk County Human Rights Commission.

COUNTY

The County of Suffolk.

COVERED ENTITY

A person required to comply with any provision of this Article.

CREDIT

The right conferred upon an individual by a creditor to incur debt and defer its payment whether or not any interest or finance charge is made for the exercise of this right.

CREDITOR

Any person or financial institution which does business in this state and which extends credit or arranges for the extension of credit by others. The term creditor includes, but is not limited to, banks and trust companies, private bankers, foreign banking corporations and national banks, savings banks, licensed lenders, savings and loan associations, credit unions, sales finance companies, insurance premium finance agencies, insurers, credit card issuers, mortgage brokers, mortgage companies, mortgage insurance corporations, wholesale and retail merchants and factors, whatever the form of their organization.

DEMONSTRATES

Meeting the burdens of production and persuasion.

DISABILITY

A. (1) A physical, mental, or medical impairment resulting from an anatomical, physiological, genetic or neurological condition which prevents the exercise of a normal bodily function or is demonstrable by medically accepted clinical or laboratory diagnostic techniques; or (2) a record of such an impairment.

B. In the case of alcoholism, drug addiction or other substance abuse, the term "disability" shall only apply to an individual who: (1) is recovering or has recovered and (2) currently is free of such abuse, and shall not include an individual who is currently engaged in the illegal use of drugs, when the covered entity acts on the basis of such use.

DOMESTIC WORKER

As defined in section 2 in the New York State Labor Law, as same may be amended from time to time.

EMPLOYEE

Shall not include any individual employed by his or her parents, spouse or child, or in the domestic service of any person, except as set forth in section 528-11.

EMPLOYER

As defined in §292 of the New York Executive Law, as same may be amended from time to time.

EMPLOYMENT AGENCY

Any person undertaking to procure employees or opportunities to work.

ESSENTIAL FUNCTIONS

The fundamental job duties of employment position held. The term "essential functions" does not include the marginal functions of the position. A job function may be considered essential for any of several reasons, including, but not limited to, any one or more of the following: (A) the reason the position exists is to perform that function; (B) the limited number of employees available among whom the performance of that job function can be distributed; and (C) the function is highly specialized, so that the incumbent in the position is hired for his or her expertise or ability to perform the particular function.

FAMILIAL STATUS

A. Any individual who is pregnant or has a child or is in the process of securing legal custody of any individual who has not attained the age of eighteen years; or

B. One or more individuals (who have not attained the age of eighteen years) being domiciled with:

1. A parent or another individual having legal custody of such individual or individuals; or

2. The designee of such parent or other individual having custody.

GENDER

Actual or perceived sex of an individual, or an individual's gender identity, self-image, appearance, behavior or expression whether or not it is different from that traditionally associated with the legal sex assigned to that individual at birth.

GROUP IDENTITY

The actual or perceived race, color, creed, age, national origin, alienage or citizenship status, gender, sexual orientation, disability, marital status, or familial status of any individual, as well as the actual military status of any individual.

GUIDE DOG

Any dog that is trained to aid an individual who is blind by a recognized guide dog training center or professional guide dog trainer, and is actually used for such purpose.

HEARING DOG

Any dog that is trained to aid an individual with a hearing impairment by a recognized hearing dog training center or professional hearing dog trainer, and is actually used for such purpose.

HOUSING ACCOMMODATION

Includes publicly assisted housing accommodations, any building, structure, or portion thereof which is used or occupied or is intended, arranged or designed to be used or occupied as the home, residence or sleeping place of one or more human beings, and any vacant land offered for sale or lease for the construction or location thereon of any such buildings, structure, or portion thereof.

LABOR ORGANIZATION

Any organization which exists and is constituted for the purpose, in whole or in part, of collective bargaining or of dealing with employers concerning grievances, terms or conditions of employment, or of mutual aid or protection in connection with employment.

LAWFUL SOURCE OF INCOME

Includes, but is not limited to, income derived from Social Security, or any form of federal, state or local public assistance or housing assistance including the Housing Choice Voucher Program.

MILITARY STATUS

An individual's participation in the military service of the United States or the military service of the state, including, but not limited to, the armed forces of the United States, the Army National Guard, the Air National Guard, the New York Naval Militia, the New York Guard, and such additional forces as may be created by the federal or state government as authorized by law.

MULTIPLE DWELLING

Includes a dwelling which is occupied primarily for permanent residence purposes and which is either rented, leased, let or hired out to be occupied as the residence or home of three or more families living independently of each other. A multiple dwelling shall not be deemed to include a hospital, convent, monastery, asylum, or public institution, or a fireproof building used wholly for commercial purposes except for not more than one janitor's apartment and not more than one penthouse occupied by not more than two families. The term "family" as used herein, means either an individual occupying a dwelling and maintaining a household, with not more than four boarders, roomers or lodgers, or two or more individuals occupying a dwelling, living together and maintaining a household, with not more than four boarders, roomers or lodgers, or two or more individuals occupying a dwelling, living together and maintaining a common household, with not more than four boarders, roomers or lodgers. A "boarder," "roomer" or "lodger" residing with a family means an individual living within the household who pays a consideration for such residence and does not occupy such space within the household as an incident of employment therein.

NATIONAL ORIGIN

Includes "ancestry."

PERSON

Includes one or more natural persons, proprietorships, limited liability companies, partnerships, associations, group associations, organizations, corporations of all types, governmental bodies or agencies, mutual companies, joint-stock companies, trusts, unincorporated associations, legal representatives, trustees, trustees in bankruptcy, fiduciary receivers, or receivers.

PLACE OF PUBLIC ACCOMMODATION, RESORT OR AMUSEMENT

Except as hereinafter specified, includes providers, whether licensed or unlicensed, of goods, services, facilities, accommodations, advantages and privileges of any kind, and places, whether licensed or unlicensed, where goods, services, facilities, accommodations, advantages and privileges of any kind are extended, offered, sold, consumed or otherwise made available to the public.

A. Such term shall not include public libraries, kindergartens, primary and secondary schools, high schools, academies, colleges and universities, professional schools, extension courses, and any educational institutions under the supervision of the regents of the State of New York; any public library, kindergarten, primary and secondary school, high school, academy, college, university, professional school, extension course or other educational facility supported in whole or in part by public funds or contributions solicited from the general public; any club or organization which by its nature is distinctly private, but no such club or organization shall be considered by its nature distinctly private if:

1. It has more than one hundred (100) members;

2. It provides regular meal service; and

3. It regularly receives payment for dues, fees, use of space, facilities, services, meals or beverages directly or indirectly from or on behalf of nonmembers for the furtherance of trade or business.

B. A corporation incorporated under the New York Benevolent Orders Law or described in the New York Benevolent Orders Law, but formed under any other law of this state, or a religious corporation incorporated under the New York Education Law or the New York Religious Corporations Law shall be deemed to be in its nature distinctly private. No institution, club, organization or place of accommodation which sponsors or conducts any amateur athletic contest or sparring exhibition and advertises or bills such contest or exhibition as a New York State championship contest or uses the words "New York State" in its announcements shall be considered by its nature distinctly private within the meaning of this Article.

PREGNANCY-RELATED CONDITION

A physical or mental condition intrinsic to pregnancy or childbirth, and includes the expression of breast milk by nursing mothers.

PREMIUM WAGES

Includes overtime pay and compensatory time off, and additional remuneration for night, weekend or holiday work, or for standby or irregular duty.

PREMIUM BENEFIT

An employment benefit, such as seniority, group life insurance, health insurance, disability insurance, sick leave, annual leave, or an educational or pension benefit that is greater than the employment benefit due the employee for an equivalent period of work performed during the regular work schedule of the employee.

PUBLICLY ASSISTED HOUSING ACCOMMODATIONS

All housing accommodations within Suffolk County in:

A. Publicly owned or operated housing accommodations;

B. Housing operated by housing companies under the supervision of the State Commissioner of Housing;

C. Housing constructed after July 1, 1950, within Suffolk County and which is either:

1. Exempt in whole or in part from taxes levied by the state or any of its political subdivisions;

2. Constructed on land sold below cost by the state or any of its political subdivisions or any agency thereof, pursuant to the Federal Housing Act of 1949;

3. Constructed in whole or in part on property acquired or assembled by the state or any of its political subdivisions or any agency thereof through the power of condemnation or otherwise for the purpose of such construction; or

4. Acquired, constructed, repaired or maintained with funds or financial assistance furnished or contributed by the state, any political subdivision of the state, or any agency or authority of the state.

D. Housing which is located in a multiple dwelling, the acquisition, construction, rehabilitation, repair or maintenance of which is, after July 1, 1955, financed in whole or in part by a loan, whether or not secured by a mortgage, the repayment of which is guaranteed or insured by the federal government or any agency thereof, or the state or any of its political subdivisions or any agency thereof, provided that such a housing accommodation shall be deemed to be publicly assisted only during the life of such loan and such guarantee or insurance; and

E. Housing which is offered for sale by a person who owns or otherwise controls the sale of 10 or more housing accommodations located on land that is contiguous (exclusive of public streets), if:

1. The acquisition, construction, rehabilitation, repair, or maintenance of such housing accommodations is, after July 1, 1955, financed in whole or in part by a loan, whether or not secured by a mortgage, the repayment of which is guaranteed or insured by the federal government or any agency thereof, or the state or any of its political subdivisions or any agency thereof, provided that such a housing accommodation shall be deemed to be publicly assisted only during the life of such loan and guarantee or insurance; or

2. A commitment, issued by a government agency after July 1, 1955, is outstanding, that acquisition of such housing accommodations may be

financed in whole or in part by a loan, whether or not secured by a mortgage, the repayment of which is guaranteed or insured by the federal government or any agency thereof, or the state or any of its political subdivisions or any agency thereof.

REAL ESTATE BROKER

Any person who, or firm which, for another and for a fee, commission, or other valuable consideration, lists for sale, sells, at auction or otherwise, exchanges, buys or rents, or offers or attempts to negotiate a sale, at auction or otherwise, exchange, purchase or rental of an estate or interest in real estate, or collects or offers to attempt to collect rent for the use of real estate, or negotiates or offers or attempts to negotiate a loan secured or to be secured by a mortgage or other encumbrance upon or transfer of real estate. In connection with the sale of lots pursuant to the provisions of Article 9-A of the New York Real Property Law, the term "real estate broker" shall also include any person or firm employed by or on behalf of the owner or owners of lots or other parcels of real estate, at a stated salary, or upon a commission, or upon a salary and commission, or otherwise, to sell such real estate, or any parts thereof, in lots or other parcels, and who or which shall sell or exchange, or offer or attempt or agree to negotiate the sale or exchange of, any such lot or parcel of real estate.

REAL ESTATE SALESPERSON

An individual employed by a licensed real estate broker to list for sale, sell or offer for sale, at auction or otherwise, to buy or to negotiate the purchase or sale or exchange of real estate, or to negotiate a loan on real estate, or to lease or rent or offer to lease, rent or place for rent any real estate, or who collects or offers or attempts to collect rent for the use of real estate for or on behalf of such real estate broker.

REASONABLE ACCOMMODATION

Actions taken which permit an employee, prospective employee or labor organization member (A) with a disability; or (B) with a pregnancy-related condition; to perform in a reasonable manner the essential functions involved in the job or occupation sought or held and include, but are not limited to, provision of an accessible worksite, acquisition or modification of equipment, support services for individuals with impaired hearing or vision, job restructuring and modified work schedules, or some form of protection or security measure: provided, however, that such actions do not impose an undue hardship on the business, program or enterprise of the entity from which action is requested.

SERVICE DOG

Any dog that is trained to work or perform specific tasks for the benefit of an individual with a disability by a recognized service dog training center or professional service dog trainer, and is actually used for such purpose.

SEXUAL ORIENTATION

Heterosexuality, homosexuality or bisexuality.

VICTIM OF DOMESTIC VIOLENCE

An individual who is a victim of an act which would constitute a family offense pursuant to subdivision 1 of §812 of the Family Court Act.

§528-7. Unlawful discriminatory practices in employment.

A. It shall be an unlawful discriminatory practice:

1. For an employer to refuse to hire or employ or to bar or to discharge from employment or to discriminate against any individual in promotion, compensation or in terms, conditions or privileges of employment because of such individual's group identity or status as a victim of domestic violence.

2. For an employment agency to discriminate against any individual, because of such individual's group identity or status as a victim of domestic violence, in receiving, classifying, disposing of or otherwise acting upon applications for its services or in referring an applicant or applicants for its services to an employer.

3. For a labor organization to exclude or to expel from its membership an individual or to discriminate in any way against any of its members or against any employer or any individual employed by an employer because of such individual's group identity or status as a victim of domestic violence.

4. For any employer, labor organization or employment agency to print or circulate or cause to be printed or circulated any statement, advertisement or publication, or to use any form of application for employment or to make any inquiry in connection with prospective employment which expresses, directly or indirectly, any limitation, specification or discrimination as to group identity or status as a victim of domestic violence, or any intent to make any such limitation, specification or discrimination, unless based upon a bona fide occupational qualification.

5. For any employer, labor organization, employment agency or any joint labor-management committee controlling apprentice training programs:

   a. To refuse to select any individual or individuals for an apprentice training program registered with the State of New York because of the individual's or individuals' group identity or status as a victim of domestic violence.

   b. To deny to or withhold from any individual or individuals, because of his or her group identity or status as a victim of domestic violence, the right to be admitted to or participate in a guidance program, an apprenticeship, training program, on-the-job training program, or other occupational training or retraining program.

   c. To discriminate against any individual in his or her pursuit of such programs or to discriminate against such an individual in the terms, conditions or privileges of such programs because of group identity or status as a victim of domestic violence.

   d. To print or circulate or cause to be printed or circulated any statement, advertisement or publication, or to use any form of application for such programs or to make any inquiry in connection with such programs which expresses, directly or indirectly, any limitation, specification or discrimination based on an individual's or applicant's group identity or status as a victim of domestic violence, or any intent to make any such limitation, specification or discrimination, unless based upon a bona fide occupational qualification.

6. For any employer, labor organization or employment agency to discharge, expel or otherwise discriminate against any individual because he or she has (a) opposed any practices forbidden under this Article; or (b) filed a complaint, testified, or assisted in any proceeding under this Article: or (c) commenced a civil action against such employer, labor organization or employment agency, or employee or agent thereof, which action alleges the commission of an unlawful discriminatory practice, or (d) participated with the Commission or its members or counsel in any investigation; or (e) provided information to the Commission or its members or counsel in any investigation.

7. For an employer to compel an employee who is pregnant to take a leave of absence, unless the employee is prevented by such pregnancy from performing the essential functions of the job or occupation in a reasonable manner and no reasonable accommodation can be made, without causing an undue hardship on the employer, which will permit the employee to perform the essential functions of the job or occupation in a reasonable manner.

8. For any employer to discriminate against an employee who chooses to express breast milk in the workplace, to refuse to provide reasonable unpaid break time or refuse to permit an employee to use paid break time or meal time each day to allow an employee to express breast milk for her nursing child for up to three (3) years following child birth, or refuse to make reasonable efforts to provide a room or other location, in close proximity to the work area, where an employee can express breast milk in privacy.

9. For an employer, employment agency or labor organization to refuse to provide reasonable accommodations to the known disabilities or pregnancy-related conditions of an employee, prospective employee or labor organization member in connection with a job or occupation sought or held or participation in a training program. Nothing contained in section 528-7(A)(9) shall be construed to require provision of accommodations which the employer, employment agency or labor organization can demonstrate will impose an undue hardship on the operation of an employer's, employment agency's, or labor organization's business, program or enterprise. Factors that may be considered by the Commission in determining whether the accommodation constitutes an undue hardship include, but are not limited to:

    i. the overall size of the business, program or enterprise with respect to the number of employees, number and types of facilities, and size of budget;

    ii. the type of operation which the business, program, or enterprise is engaged in, including the composition and structure of the workforce; and

    iii. the nature and cost of the accommodation needed.

10. For any employer, or an employee or agent thereof, to impose upon an individual as a condition of obtaining or retaining employment, including opportunities for promotion, advancement or transfers, any terms or conditions that would require such individual to violate or forego a sincerely held practice of his or her religion including, but not limited to, the observance of any particular day or days or any portion thereof as a Sabbath or other holy day in accordance with the requirements of his or her religion, unless, after engaging in a bona fide effort, the employer demonstrates that it is unable to reasonably accommodate the employee's or prospective employee's sincerely held religious

observance or practice without undue hardship on the conduct of the employer's business.

a. Notwithstanding any other provision of law to the contrary, an employee shall not be entitled to premium wages or premium benefits for work performed during hours to which such premium wages or premium benefits would ordinarily be applicable, if the employee is working during such hours only as an accommodation to his or her sincerely held religious requirements. Nothing in section 528-7(A)(10)(a) or section 528-7(A)(10)(b) shall alter or abridge the rights granted to an employee concerning the payment of wages or privileges of seniority accruing to that employee.

b. Except where it would cause an employer to incur an undue hardship, no individual shall be required to remain at his or her place of employment during any day or days or portion thereof that, as a requirement of his or her religion, he or she observes as his or her Sabbath or other holy day, including a reasonable time prior and subsequent thereto for travel between his or her place of employment and his or her home; provided, however, that any such absence from work shall, wherever practicable in the reasonable judgment of the employer, be made up by an equivalent amount of time and work at some other mutually convenient time, or shall be charged against any leave with pay ordinarily granted, other than sick leave; provided further, however, that any such absence not so made up or charged, may be treated by the employer of such individual as leave taken without pay.

c. It shall be an unlawful discriminatory practice for an employer or an employee or agent thereof to refuse to permit an employee to utilize leave, as provided in section 528-7(A)(10)(b), solely because the leave will be used for absence from work to accommodate the employee's sincerely held religious observance or practice.

d. As used in this section 528-7(A)(10):

"Undue hardship" means an accommodation requiring significant expense or difficulty (including a significant interference with the safe or efficient operation of the workplace or a violation of a bona fide seniority system). Factors that may be considered by the Commission in determining whether the accommodation constitutes an undue hardship include, but are not limited to:

(a) the identifiable cost of the accommodation, including the costs of loss of productivity and of retaining or hiring employees or transferring employees from one facility to another, in relation to the size and operating cost of the employer;

(b) the number of individuals who will need the particular accommodation to a sincerely held religious observance or practice;

(c) for an employer with multiple facilities, the degree to which the geographic separateness or administrative or fiscal relationship of the facilities will make the accommodation more difficult or expensive; and

(d) the resulting inability of an employee to perform the essential functions of the position in which he or she is employed.

11.a. For any fire department or fire company therein, through any member or members thereof, officers, board of fire commissioners or other body or office having power of appointment of volunteer firefighters, directly or indirectly, by ritualistic practice, constitutional or by-law prescription, by tacit agreement among its members, or otherwise, to deny to any individual membership in any volunteer fire department or fire company therein, or to expel or discriminate against any volunteer member of a fire department or fire company therein, because of the race, creed, color, national origin, sexual orientation, military status, gender or marital status of such individual.

b. Upon the filing of a complaint under this Article, and in the event of a finding that an unlawful discriminatory practice has been engaged in, the board of fire commissioners or other body or office having power of appointment of volunteer firefighters shall be served with any order required under this Article to be served on any or all respondents requiring such respondent or respondents to cease and desist from such unlawful discriminatory practice and to take affirmative action. Unless such board has been found to have engaged in an unlawful discriminatory practice, service upon such board of such order shall not constitute such board or its members as a respondent nor constitute a finding of an unlawful discriminatory practice against such board or its members.

12.a. For any person to deny any license or employment to any individual by reason of his or her having been convicted of one or more criminal offenses, or by reason of a finding of a lack of "good moral character" which is based upon his or her having been convicted of one or more criminal offenses, when such denial is in violation of the provisions of Article 23-A of the New York Correction Law. Further, there shall be a rebuttable presumption in favor of excluding from evidence the prior incarceration or conviction of any individual, in a case alleging that the employer has been negligent in hiring or retaining an applicant or employee, or supervising a hiring manager, if after learning about an applicant or employee's past criminal conviction history, such employer has evaluated the factors set forth in section seven hundred fifty-two of the correction law, and made a reasonable, good faith determination that such factors militate in favor of hire or retention of that applicant or employee.

b. Unless specifically required or permitted by statute, for any person to make any inquiry about, whether in any form of application or otherwise, or to act upon adversely to the individual involved, any arrest or criminal accusation of such individual not then pending against that individual which was followed by a termination of that criminal action or proceeding in favor of such individual, as defined in subdivision two of section 160.50 of the criminal procedure law, or by a youthful offender adjudication, as defined in subdivision one of section 720.35 of the criminal procedure law, or by a conviction for a violation sealed pursuant to section 160.55 of the criminal procedure law or by a conviction which is sealed pursuant to section 160.58 of the criminal procedure law, in connection with the licensing, employment or providing of credit or insurance to such individual; provided, further, that no person shall be required to divulge information pertaining to any arrest or criminal accusation of such individual not then pending against that individual which was followed by a termination of that criminal action or proceeding in favor of such individual, as defined in subdivision two of section 160.50 of the criminal procedure law, or by a youthful offender adjudication, as defined in subdivision one of section 720.35 of the criminal procedure law, or by a conviction for a violation sealed pursuant to section 160.55 of the criminal procedure law, or by a conviction which is

sealed pursuant to section 160.58 of the criminal procedure law. The provisions of this section 528-7(A)(12) shall not apply to the licensing activities of governmental bodies in relation to the regulation of guns, firearms and other deadly weapons or in relation to an application for employment as a police officer or peace officer as those terms are defined in subdivisions thirty-three and thirty-four of section 1.20 of the criminal procedure law; provided further that the provisions of this section 528-7(A)(12) shall not apply to an application for employment or membership in any law enforcement agency with respect to any arrest or criminal accusation which was followed by a youthful offender adjudication, as defined in subdivision one of section 720.35 of the criminal procedure law, or by a conviction for a violation sealed pursuant to section 160.55 of the criminal procedure law, or by a conviction which is sealed pursuant to section 160.58 of the criminal procedure law.

B. An employer shall be liable for an unlawful discriminatory practice based upon the conduct of an employee who, or agent which is in violation of any provision of section 528-7 where:

1. The employee or agent exercises or exercised managerial or supervisory responsibility; or
2. The employer knew of the employee's or agent's discriminatory conduct, and acquiesced in such conduct or failed to take immediate and appropriate corrective action. An employer shall be deemed to have knowledge of any employee's or agent's discriminatory conduct where that conduct was known by another employee or agent who exercised managerial or supervisory responsibility; or
3. The employer should have known of the employee's or agent's discriminatory conduct and failed to exercise reasonable diligence to prevent such discriminatory conduct.

§528-8. Unlawful discriminatory practices in places of public accommodation, resort or amusement.

A. It shall be an unlawful discriminatory practice for any person, being the owner, lessee, proprietor, manager, superintendent, agent or employee of any place of public accommodation, resort or amusement, because of the actual or perceived race, color, creed, national origin, alienage or citizenship status, gender, sexual orientation, disability, or marital status of any individual or the actual military status of any individual, directly or indirectly, to refuse, withhold from or deny to such individual any of the accommodations, advantages, facilities or privileges thereof, including the extension of credit, or, directly or indirectly, to publish, circulate, issue, display, post or mail any written or printed communication, notice or advertisement to the effect that any of the accommodations, advantages, facilities and privileges of any such place shall be refused, withheld from or denied to any individual on account of actual or perceived race, color, creed, national origin, alienage or citizenship status, gender, sexual orientation, disability, or marital status of any individual or the actual military status of any individual, or that the patronage or custom thereat of any individual of or purporting to be of any particular race, creed, color, national origin, alienage or citizenship status, gender, sexual orientation, disability, marital status or actual military status is unwelcome, objectionable, or not acceptable, desired or solicited.

B. Nothing in this section 528-8 shall be construed to prevent the barring of any individual, because of the sex of such individual, from places of public accommodations, resort or amusement, based on bona fide considerations of public policy; nor shall this section 528-8

apply to the rental of rooms in a housing accommodation which restricts such rental to individuals of one sex.

C. For the purposes of this section 528-8, "unlawful discriminatory practice" includes:

1. A refusal to make reasonable modifications in policies, practices, or procedures, when such modifications are necessary to afford facilities, privileges, advantages or accommodations to individuals with disabilities, unless such person can demonstrate that making such modifications would fundamentally alter the nature of such facilities, privileges, advantages or accommodations or would result in an undue burden;

2. A refusal to take such steps as may be necessary to ensure that no individual with a disability is excluded or denied services because of the absence of auxiliary aids and services, unless such person can demonstrate that taking such steps would fundamentally alter the nature of the facility, privilege, advantage or accommodation being offered or would result in an undue burden;

3. A refusal to remove architectural barriers, and communication barriers that are structural in nature, in existing facilities, and transportation barriers in existing vehicles and rail passenger cars used by an establishment for transporting individuals (not including barriers that can only be removed through the retrofitting of vehicles or rail passenger cars by the installation of a hydraulic or other lift), where such removal is readily achievable; and

4. Where such person can demonstrate that the removal of a barrier under section 528-8(C)(3) is not readily achievable, a failure to make such facilities, privileges, advantages or accommodations available through alternative methods if such methods are readily achievable.

D. For the purposes of section 528-8(C) above:

1. "Readily achievable" means easily accomplishable and able to be carried out without much difficulty or expense. Factors that may be considered by the Commission in determining whether an action is readily achievable include, but are not limited to:

   a. the nature and cost of the action needed under section 528-8(C);

   b. the overall financial resources of the facility or facilities involved in the action; the number of individuals employed at such facility; the effect on expenses and resources or the impact otherwise of such action upon the operation of the facility;

   c. the overall financial resources of the place of public accommodation, resort or amusement; the overall size of the business of such a place with respect to the number of its employees; the number, type and location of its facilities; and

   d. the type of operation or operations of the place of public accommodation, resort or amusement, including the composition, structure and functions of the workforce of such place; the geographic separateness, administrative or fiscal relationship of the facility or facilities in question to such place.

2. "Auxiliary aids and services" include:

a. qualified interpreters or other effective methods of making aurally delivered materials available to individuals with hearing impairments;

b. qualified readers, taped texts or other effective methods of making visually delivered materials available to individuals with visual impairments;

c. acquisition or modification of equipment or devices; and

d. other similar services and actions.

3. "Undue burden" means significant difficulty or expense. Factors that may be considered by the Commission in determining whether an action would result in an undue burden include, but are not limited to:

a. The nature and cost of the action needed under section 528-8(C);

b. The overall financial resources of the site or sites involved in the action; the number of individuals employed at the site; the effect on expenses and resources; legitimate safety requirements that are necessary for safe operation, including crime prevention measures; or the impact otherwise of the action upon the operation of the site;

c. The geographic separateness, and the administrative or fiscal relationship of the site or sites in question to any parent corporation or entity;

d. If applicable, the overall financial resources of any parent corporation or entity; the overall size of the parent corporation or entity with respect to the number of its employees; the number, type, and location of its facilities; and

e. If applicable, the type of operation or operations of any parent corporation or entity, including the composition, structure, and functions of the workforce of the parent corporation or entity.

E. Sections 528-8(C) and (D) shall not apply to any air carrier, the National Railroad Passenger Corporation, or public transportation facilities, vehicles or services owned, leased or operated by the state, a county, city, town or village, or any agency thereof, or by any public benefit corporation or authority.

§528-9. Unlawful discriminatory practices in the sale, lease or rental of housing accommodations or commercial property.

A. It shall be an unlawful discriminatory practice:

1. To refuse to sell, rent, lease or otherwise deny to or withhold from any individual or group of individuals any housing accommodation, constructed or to be constructed, land or commercial space, or an interest therein, or refuse to negotiate for the sale, rental or lease of any housing accommodation, land or commercial space, or an interest therein, to any individual or group of individuals, because of the group identity or lawful source of income of such individual or individuals or to represent that any housing

accommodation, land or commercial space, or an interest therein, is not available for inspection, sale, rental or lease when, in fact, it is so available, or to otherwise deny to or withhold any housing accommodation, land or commercial space, or an interest therein, or any facilities of any housing accommodation or commercial space from any individual or individuals because of the group identity or lawful source of income of such individual or individuals;

2. To discriminate against any individual or group of individuals because of the group identity or lawful source of income of such individual or individuals in the terms, conditions or privileges of the sale, rental, or lease of any housing accommodation, land or commercial space, or an interest therein, or in the furnishing of facilities or services in connection therewith;

3. To discriminate against any individual or group of individuals in making available a residential real estate transaction, or in the terms and conditions of such a transaction, because of the group identity or lawful source of income of such individual or individuals;

4. To refuse to permit, at the expense of the individual with a disability, reasonable modifications of existing premises occupied or to be occupied by the said individual, if the modifications may be necessary to afford the individual full enjoyment of the premises, in conformity with the provisions of the New York State Uniform Fire Prevention and Building Code, except that, in the case of a rental, the landlord may, where it is reasonable to do so, condition permission for a modification on the renter agreeing to restore the premises to the condition that existed before the modification, reasonable wear and tear excepted;

5. To refuse to make reasonable accommodations in rules, policies, practices, or services, when such accommodations may be necessary to afford an individual with a disability equal opportunity to use and enjoy a housing accommodation, including reasonable modifications to the common use portions of the housing accommodation;

6. In connection with the design and construction of covered multiple dwellings for first occupancy after January 1, 2007, to fail to design and construct those dwellings in such a manner that:

   a. The public use and common use portions of such dwellings are readily accessible to and usable by handicapped individual;

   b. All the doors designed to allow passage into and within all premises within such dwellings are sufficiently wide to allow passage by handicapped individuals in wheelchairs; and

   c. All premises within such dwellings contain the following features of adaptive design:

      i. An accessible route into and through the dwelling;

      ii. Light switches, electrical outlets, thermostats, and other environmental controls in accessible locations;

      iii. Reinforcements in bathroom walls to allow later installation of grab bars; and

      iv. Usable kitchens and bathrooms such that an individual in a wheelchair can maneuver about the space.

Compliance with the appropriate requirements of the American National Standard Institute for buildings and facilities providing accessibility and usability for physically handicapped people (commonly cited as "ANSI A117.1") suffices to satisfy the requirements of section 528-9(A)(6)(c);

7. To make, print, or publish, or cause to be made, printed or published any statement, advertisement, or publications, or to use any form of application for the purchase, rental, or lease of any housing accommodation, land or commercial space, or an interest therein, or to make any record or inquiry in connection with the prospective purchase, rental, or lease of such housing accommodation, land or commercial space, or an interest therein, which expresses, directly or indirectly, any limitation, specification, or discrimination with respect to group identity or because of the lawful source of income of such individual or individuals, or any intent to make any such limitation, specification, or discrimination;

8. To induce or attempt to induce, for profit or otherwise, any person to sell, rent or lease any housing accommodation, land, or commercial space, or an interest therein, by representations, explicit or implicit, regarding the entry or prospective entry into the neighborhood of an individual or group of individuals because of his, her or their group identity or lawful source of income;

9. To threaten, intimidate, or interfere with individuals in their enjoyment of a housing accommodation, land or commercial space because of their group identity or lawful source of income, or the group identity of their guests, invitees, visitors or associates.

B. It shall be an unlawful discriminatory practice for any real estate broker, real estate salesperson, or an employee or agent of a real estate broker or real estate salesperson:

1. To refuse to sell, rent or lease any housing accommodation, land or commercial space, or an interest therein, to any individual or group of individuals or to refuse to negotiate for the sale, rental or lease of any housing accommodation, land or commercial space, or an interest therein, to any individual or group of individuals because of the group identity or because of the lawful source of income of such individual or group of individuals, or to represent that any housing accommodation, land or commercial space, or an interest therein, is not available for inspection, sale, rental or lease when, in fact, it is so available, or otherwise deny or withhold any housing accommodation, land or commercial space, or an interest therein, or any facilities of any such housing accommodation or commercial space from any individual or group of individuals because of the group identity or because of the lawful source of income of such individual or individuals.

2. To print or circulate or cause to be printed or circulated any statement, advertisement or publication, or to use any form of application for the purchase, sale, rental or lease of any housing accommodation, land, or commercial space, or an interest therein, or to make any record or inquiry in connection with the prospective purchase, sale, rental or lease of any housing accommodation, land or commercial space, or an interest therein, which expresses, directly or indirectly, any limitation, specification, or discrimination as to group identity or as to lawful source of income, or any intent to make any such limitation, specification or discrimination.

C. Exceptions.

1. The provisions of section 528-9, as they relate to age, shall not apply to individuals under the age of eighteen years.

2. The provisions of section 528-9(A)(1) through (7) shall not apply: a) to the rental of housing accommodations in a building which contains housing accommodations for not more than two (2) families if the owner or members of his or her family reside in one of such housing accommodations; or b) to the rental of a room or rooms in a housing accommodation if such rental is by the occupant of the housing accommodation or by the owner of the housing accommodation and he or she or members of his or her family reside in such housing accommodation; or c) solely with respect to age and familial status, to the restriction of the sale, rental or lease of housing accommodations exclusively to individuals 62 years of age or older and the spouse of any such individual, or for housing intended and operated for occupancy by at least one individual 55 years of age or older per unit. In determining whether housing is intended and operated for occupancy by individuals 55 years of age or older, Section 807(b)(2)(C) [42 U.S.C. §3607(b)(2)(c)] of the federal Fair Housing Act of 1988, as amended, shall apply.

3. The provisions of section 528-9, as they relate to unlawful discriminatory practices on the basis of lawful source of income, shall not apply to housing accommodations that contain two (2) or fewer housing units; provided, however, the provisions of section 528-9 shall apply to all housing accommodations, regardless of the number of units contained in each, of any person who has the rights to sell, rent or lease or approve the sale, rental or lease of at least three (3) housing accommodations within Suffolk County, constructed or to be constructed, or has the rights to sell, rent or lease or approve the sale, rental or lease of interests in at least three (3) housing accommodations.

4. Nothing in section 528-9(A)(4), (5) and (6) requires that a housing accommodation or multiple dwelling be made available to an individual whose tenancy would constitute a direct threat to the health or safety of other individuals or whose tenancy would result in substantial physical damage to the property of others.

§528-10. Unlawful discriminatory practices in relation to credit.

A. It shall be an unlawful discriminatory practice for any creditor or any officer, agent or employee thereof:

1. In the case of applications for credit with respect to the purchase, acquisition, construction, rehabilitation, repair or maintenance of any housing accommodation, land or commercial space, to discriminate against such applicant because of the group identity of such applicant or applicants, or any member, stockholder, director, officer, or employee of such applicant or applicants, or of the prospective occupants or tenants of such housing accommodation, land or commercial space, in the granting, withholding, extending, renewing, or in the fixing of the rates, terms or conditions of any such financial assistance or credit; or

2. To use any form of application for credit or make any record or inquiry in connection with applications for financial assistance or credit which expresses, directly or indirectly, limitations, specifications, preferences, or discrimination because of the group identity of the applicant or the applicants; or

3. To discriminate in the granting, withholding, extending or renewing, or in the fixing of the rates, terms or conditions of any form of credit, on the basis an applicant or applicants' group identity; or

4. To refuse to consider sources of an applicant's income or to subject an applicant's income to discounting, in whole or in part, because of an applicant's group identity.

B. Without limiting the generality of section 528-10(A), it shall be considered discriminatory if, because of an applicant's group identity:

1. An applicant or class of applicants is denied credit in circumstances where other applicants of like overall creditworthiness are granted credit; or

2. Special requirements or conditions, such as requiring co-obligors or reapplication upon marriage, are imposed upon an applicant or class of applicants in circumstances where similar requirements or conditions are not imposed upon other applicants of like overall creditworthiness.

C. Notwithstanding any provision of this section 528-10 to the contrary, it shall not be:

1. Considered an unlawful discriminatory practice if credit differentiations or decisions are based upon factually supportable, objective differences in applicants' overall credit worthiness, which may include reference to such factors as current income, assets and prior credit history of such applicants, as well as reference to any other relevant factually supportable data; provided, however, that no creditor shall consider, in evaluating the credit worthiness of an applicant, aggregate statistics or assumptions relating to group identity or the applicant's lawful source of income.

2. Considered an unlawful discriminatory practice to consider age in determining creditworthiness when age has a demonstrable and statistically sound relationship to a determination of creditworthiness.

§528-11. Unlawful discriminatory practices relating to domestic workers.

A. It shall be an unlawful discriminatory practice for an employer or any employee or agent thereof to:

1. Engage in unwelcome sexual advances, requests for sexual favors, or other verbal or physical conduct of a sexual nature to a domestic worker when: (a) submission to such conduct is made either explicitly or implicitly a term or condition of an individual's employment; (b) submission to or rejection of such conduct by an individual is used as the basis for employment decisions affecting such individual; or (c) such conduct has the purpose or effect of unreasonably interfering with an individual's work performance by creating an intimidating, hostile, or offensive working environment; or

2. Subject a domestic worker to unwelcome harassment based on the individual's gender, race, creed or national origin, where such harassment has the purpose or effect of unreasonably interfering with an individual's work performance by creating an intimidating, hostile, or offensive working environment.

§528-12. General provisions defining unlawful discriminatory practices.

A. It shall be an unlawful discriminatory practice for any person to aid, abet, incite, compel or coerce the doing of any of the acts forbidden under this Article.

B. It shall be an unlawful discriminatory practice for any person engaged in any activity to which this Article applies to retaliate or discriminate against any individual because he or she has opposed any practice forbidden under this Article or because he or she has filed a complaint, testified or assisted in any proceeding under the Article.

C. It shall be an unlawful discriminatory practice for any person engaged in any activity covered by this Article to discriminate against a blind individual, a hearing impaired individual or an individual with a disability on the basis of his or her use of a guide dog, hearing dog or service dog.

D. It shall be an unlawful discriminatory practice to coerce, intimidate, threaten, or interfere with any individual in the exercise or enjoyment of, or on account of his or her having exercised or enjoyed, any right granted or protected by this Article; or on account of his or her having aided or encouraged any other individual in the exercise or enjoyment of any right granted or protected by this Article; or because of the group identity or status as a victim of domestic violence of an individual with whom such individual has or is perceived to have a relationship or association.

E. It shall be an unlawful discriminatory practice for any party to a conciliation agreement entered into pursuant to section 528-13 to violate the terms of such agreement.

F. Nothing contained in this Article shall be construed to bar any religious or denominational institution or organization, or any organization operated for charitable or educational purposes, which is operated, supervised or controlled by or in connection with a religious organization, from limiting participation in any activity, including, but not limited to, employment, education, sales, lease, or rental of housing accommodations, land or commercial space, or granting admission to, or giving preference to individuals of the same religion or denomination or taking such action as is calculated by such organization to promote the religious principles for which it is established or maintained.

§528-13. Jurisdiction and Procedures.

A. The Commission shall have jurisdiction to entertain a complaint where:

1. Any complainant or individual aggrieved by an unlawful discriminatory practice, by himself or herself or by such individual's attorney, makes, signs and files with the Commission a timely, verified complaint, in writing, which shall: a) state the name of the person alleged to have committed the unlawful discriminatory practice complained of, and the address of such person, if known; b) set forth the particulars of the alleged unlawful discriminatory practice; and c) contain such other information as may be required by the Commission. The Commission shall acknowledge the filing of the verified complaint and advise the complainant of the time limits and choice of forums set forth in this Article; and

2. The Commission itself makes, signs and files a verified complaint alleging that a person has committed an unlawful discriminatory practice.

B. The Commission shall serve a copy of the verified complaint upon the respondent and all persons it deems to be necessary parties and shall advise the respondent of his, her or its procedural rights and obligations as set forth herein. Any verified complaint filed pursuant to this Article may be amended pursuant to procedures prescribed by rules of the Commission by filing such amended verified complaint with the Commission and serving a copy thereof upon all parties to the proceeding.

C. The Commission shall not have jurisdiction to entertain a complaint if:

1. The complainant has previously initiated a civil action in a court of competent jurisdiction alleging an unlawful discriminatory practice as defined by this Article with respect to the same grievance which is the subject of the complaint under this Article, unless such civil action has been dismissed without prejudice or has been withdrawn without prejudice; or

2. The complaint has been filed more than one year after the alleged unlawful discriminatory practice occurred.

D. The Commission shall not entertain jurisdiction over a complaint filed against any Suffolk County governmental agency, department or body.

E. Answer.

1. Within ten (10) days after a copy of the verified complaint is served upon the respondent by the Commission, the respondent shall file a written, verified answer thereto with the Commission, and the Commission shall cause a copy of such answer to be served upon the complainant and any necessary party.

2. The respondent shall specifically admit, deny, or explain each of the facts alleged in the complaint, unless the respondent is without knowledge or information sufficient to form a belief, in which case the respondent shall so state, and such statement shall operate as a denial.

3. Any allegation in the complaint not specifically denied or explained shall be deemed admitted and shall be so found by the Commission unless good cause to the contrary is shown.

4. All affirmative defenses shall be stated separately in the answer.

5. Upon request of the respondent and for good cause shown, the period within which an answer is required to be filed may be extended in accordance with the rules of the Commission.

6. Any necessary party may file with the Commission a written, verified answer to the complaint, and the Commission shall cause a copy of such answer to be served upon the complainant, respondent and any other necessary party.

7. Any answer filed pursuant to this section may be amended pursuant to procedures prescribed by rule of the Commission by filing such amended answer with the Commission and serving a copy thereof upon the complainant and any necessary party to the proceeding.

F. Withdrawal of complaint.

1. A complaint filed pursuant to section 528-13(A)(1) may be withdrawn by the complainant as of right at any time prior to a determination of the issue of probable cause. Such a withdrawal shall be in writing and signed by the complainant.

2. Unless such complaint is withdrawn pursuant to a conciliation agreement, the withdrawal of a complaint shall be without prejudice:

   a. To the continued investigation of the complaint by the Commission in accordance with rules of the Commission;

   b. To the initiation of a complaint by the Commission based in whole or in part upon the same facts;

   c. To the commencement of a civil action by the complainant in a court of competent jurisdiction; or

   d. To the commencement of a civil action in a court of competent jurisdiction by the County Attorney.

G. Dismissal of complaint.

1. The Commission may, in its discretion, dismiss a complaint for administrative convenience at any time prior to the taking of testimony at a hearing. Administrative convenience shall include, but not be limited to, the following circumstances:

   a. Commission personnel have been unable to locate the complainant after diligent efforts to do so;

   b. The complainant has repeatedly failed to appear at mutually agreed upon appointments with Commission personnel or is unable or unwilling to meet with Commission personnel, to provide requested documentation, or to attend a hearing;

   c. Relief is precluded by the respondent's absence or other special circumstances;

   d. The complainant's objections to a proposed conciliation agreement are without substance;

   e. Holding a hearing will not benefit the complainant;

   f. The complainant has repeatedly engaged in conduct which is disruptive to the orderly functioning of the Commission;

   g. Prosecution of the complaint will not serve the public interest;

   h. The complainant has filed and has an action or proceeding pending before any administrative agency under any other law of the state alleging an unlawful discriminatory practice as defined by this Article with respect to the same grievance which is the subject of the complaint under this Article; or

   i. The complainant has filed a complaint with the New York State Division of Human Rights alleging an unlawful discriminatory practice as defined by this Article with

respect to the same grievance which is the subject of the complaint under this Article and a final determination has been made thereon.

2. The Commission shall dismiss a complaint for administrative convenience where a complainant requests that it do so for the purpose of commencement by the complainant of a civil action in a court of competent jurisdiction.

3. In accordance with the rules of the Commission, the Commission shall dismiss a complaint if the complaint is not within the jurisdiction of the Commission.

4. If, after investigation, the Commission determines that probable cause does not exist to believe that the respondent has engaged or is engaging in an unlawful discriminatory practice, the Commission shall dismiss the complaint as to such respondent.

5. The Commission shall promptly serve notice of any dismissal pursuant to this section upon the complainant, respondent and any necessary party.

6. The complainant may, within thirty (30) days of service of a notice of dismissal, and in accordance with the rules of the Commission, apply to the Executive Director of the Commission for review of any dismissal pursuant to this section. Upon such application, the Executive Director shall review such action and issue an order affirming, reversing or modifying such determination or remanding the matter for further investigation and action. A copy of such order shall be served upon the complainant, respondent and any necessary party.

H. Mediation and Conciliation.

1. If, in the judgment of the Commission, circumstances so warrant, the Commission shall, to the extent feasible, endeavor to resolve the complaint by any method of dispute resolution prescribed by rule of the Commission, including, but not limited to, mediation and conciliation.

2. Mediators shall be selected by the Executive Director of the Commission and may include Commission staff.

3. The terms of any conciliation agreement will contain such provisions as may be agreed upon by the Commission, the complainant and the respondent.

4. The members of the Commission and its staff shall not publicly disclose what transpired in the course of mediation and conciliation efforts.

5. If a conciliation agreement is entered into, the Commission shall embody such agreement in an order and serve a copy of such order upon all parties to the conciliation agreement. Every conciliation agreement is subject to public disclosure except where the Commission determines, either on its own or pursuant to a request of a party(ies), that disclosure is not necessary to further the purposes of this Article.

I. Investigation.

1. Every complaint shall be investigated in a timely, comprehensive and thorough manner, according to standards and procedures to be adopted in the rules of procedure of the Commission.

2. Notwithstanding anything contained in section 119(G) of the Suffolk County Code to the contrary, the Commission may at any time issue subpoenas requiring attendance and giving of testimony by witnesses and the production of books, papers, documents and other evidence relating to any matter under investigation or any question before the Commission. The issuance of subpoenas shall be governed by the civil practice law and rules.

3. At the end of each investigation, the Commission shall prepare a final investigative report. The Commission shall make available, on the request of a complainant or respondent, a copy of the final investigative report.

J. Determination of Probable Cause.

1. Except in connection with Commission-initiated complaints, which shall not require a determination of probable cause, where the Commission determines that probable cause exists to believe that the respondent has engaged or is engaging in an unlawful discriminatory practice, the Commission shall issue a written notice to the complainant and respondent so stating. A determination of probable cause is not a final order of the Commission and shall not be administratively or judicially reviewable.

2. If a determination is made pursuant to section 528-13(J)(1) that probable cause exists, or if a Commission-initiated complaint has been filed, the Executive Director of the Commission shall refer the complaint to an administrative law judge unless the matter would be more appropriately handled by the New York State Division of Human Rights and would further this Article.

3. If a Commission-initiated complaint has been filed, the Executive Director of the Commission shall serve a notice upon the complainant, the respondent and any necessary party that the complaint has been so filed.

4. Nothing in section 528-13 shall be interpreted to prevent the receiving or other processing of complaints in accordance with any cooperative agreement with any federal or state agency concerned with the enforcement of laws against discrimination.

K. Hearing.

1. A hearing on the complaint shall be held before an administrative law judge, who shall be any attorney in good standing designated by the Commission.

2. The place of any such hearing shall be the office of the Commission or such other place as may be designated by the Commission. Notice of the date, time and place of such hearing shall be served upon the complainant, respondent and any necessary party.

3. The case in support of the complaint shall be presented before an administrative law judge. The complainant may present additional testimony and cross-examine witnesses, in person or by counsel. With respect to Commission-initiated complaints, the complainant may present additional testimony and cross-examine witnesses, in person or by counsel, if the complainant shall have intervened pursuant to rules established by the Commission.

4. The administrative law judge may, in his or her discretion, permit any person who has a substantial interest in the complaint to intervene as a party and may require the joinder of necessary parties.

5. Evidence relating to endeavors at mediation or conciliation by, between or among the Commission, the complainant and the respondent shall not be admissible at the hearing.

6. If the respondent has failed to answer the complaint within the time period prescribed in section 528-13(E) above, the administrative law judge shall enter a default and the hearing shall proceed to determine the evidence in support of the complaint; provided, however, that, upon application, the administrative law judge may, for good cause shown, open a default in answering, upon equitable terms and conditions, including the taking of an oral answer.

7. A respondent who has filed an answer or whose default in answering has been set aside by the Commission for good cause shown, or a necessary party, or a complainant or other person who has intervened pursuant to the rules of the Commission, may appear at such hearing, in person or otherwise, with or without counsel, and cross-examine witnesses, present testimony and offer evidence.

8. The hearing shall be governed by the rules of evidence applicable in the Supreme Court of the State of New York. The testimony taken at the hearing shall be under oath and shall be transcribed.

9. Subsequent to the hearing and to such briefing as the presiding administrative law judge may direct, the presiding administrative law judge shall prepare a recommended decision and order and forward that recommended decision and order, along with the record in the case, to the Executive Director.

L. Decision and Order.

1. If, upon all the evidence at the hearing, and upon the findings of fact, conclusions of law and relief recommended by an administrative law judge, the Executive Director shall find that a respondent has engaged in any unlawful discriminatory practice as set forth in this Article, the Executive Director shall state his/her findings of fact and conclusions of law and shall issue and cause to be served on such respondent an order for such relief as may be appropriate. Such order shall require the respondent to take such affirmative action as, in the judgment of the Executive Director, will effectuate the purposes of this Article and shall include, but not be limited to:

   a. cease and desist from the unlawful discriminatory practice;

   b. hiring, reinstatement or upgrading of employees, with or without back pay, restoration to membership in any respondent labor organization, admission to or participation in a guidance program, apprenticeship training program, on the job training program or other occupational training or retraining program;

   c. selling, renting or leasing, or approving the sale, rental or lease of housing accommodations, land, or commercial space, or an interest therein, or the provision of credit with respect thereto, without unlawful discrimination, if such actions are appropriate;

   d. requiring training, monitoring, or adopting alternative policies;

   e. payment of compensatory damages to the individual aggrieved by such practice or act; or

f. submission of reports with respect to the manner of compliance.

The Commission may also direct the payment of civil fines and penalties and attorney's fees to the County in the amounts and under circumstances described below in sections 528-14 and 528-15.

2. If, upon all the evidence at the hearing, and upon the findings of fact and conclusions of law recommended by the administrative law judge, the Executive Director shall find that a respondent has not engaged in any such unlawful discriminatory practice, the Executive Director shall state his/her findings of fact and conclusions of law and shall issue and cause to be served on the complainant, respondent, and any necessary party or any complainant who has not intervened an order dismissing the complaint as to such respondent.

M. Reopening of Proceeding by Commission.

The Commission may reopen any proceeding, or vacate or modify any order or determination of the Commission, whenever justice so requires, in accordance with the rules of the Commission.

N. Injunction and Temporary Restraining Order.

At any time after the filing of a complaint with the Commission alleging an unlawful discriminatory practice where there is reason to believe that the respondent, or any other person acting in concert with the respondent, may do or cause to be done any act that would tend to render ineffectual relief that could be ordered:

1. The County may commence or cause to be commenced, a special proceeding in accordance with article sixty-three of the civil practice law and rules for an order to show cause why the respondent and such other persons should not be enjoined from doing or causing such acts to be done; and

2. In the case of unlawful discriminatory practices in relation to the sale, lease, or rental of housing accommodations or commercial property, where the County has obtained injunctive relief pursuant to this section, a notice may be posted by the County in a conspicuous place on such housing accommodation or commercial property stating that such accommodation or property is the subject of a complaint before the Commission and that prospective buyers, renters, or lessees will take such accommodations or property at their own risk; provided, however, that no such notice shall be posted where the person charged with discrimination agrees in writing not to sell, rent, or lease such housing accommodations or property during the pendency of the action or proceeding against him, her, or it. Any willful destruction, defacement, alteration or removal of such notice by the owner or the agents or employees of the owner shall be a misdemeanor punishable upon conviction by a fine of up to $500.

3. Nothing herein shall prevent a complainant from applying to a court of competent jurisdiction for an injunction, temporary or permanent, or from filing a lis pendens against property.

O. Judicial Review.

1. Any complainant, respondent or other person aggrieved by a final order of the Executive Director of the Commission issued pursuant to sections 528-13(G) and 528-13(L) above, may obtain judicial review thereof in a proceeding as provided in this section 528-13(O).

2. Such proceeding shall be brought in Supreme Court, Suffolk County;

3. Such proceeding shall be initiated by the filing of a petition in such court and the issuance and service of a notice of petition returnable before such court. Thereupon, the court shall have jurisdiction of the proceeding and of the questions determined therein, and shall have power to make and enter upon the pleadings, testimony, and proceedings set forth in any written transcript of the record upon the hearing before the Commission an order annulling, confirming or modifying the order of the Commission, in whole or in part, or to grant to the petitioner, or any other party, such temporary relief, restraining order, or other order or relief as the court determines is just and proper.

4. A proceeding under this section 528-13(O) must be instituted within sixty (60) days after the service of the final order of the Commission.

P. Enforcement.

1. Any action or proceeding that may be appropriate or necessary for the enforcement of any order issued by the Commission pursuant to this Article, including actions to secure permanent injunctions enjoining any acts or practices which constitute a violation of any such order, mandating compliance with the provisions of any such order, imposing penalties, or for such other relief as may be appropriate, may be initiated in any court of competent jurisdiction by the County on behalf of the Commission. In any such action or proceeding, application may be made for a temporary restraining order or preliminary injunction, enforcing and restraining all persons from violating any provisions of any such order, or for such other relief as may be just and proper, until hearing and determination of such action or proceeding and the entry of final judgment or order thereon. The court to which such application is made may make any or all of the orders specified, as may be required in such application, with or without notice, and may make such other or further orders or directions as may be necessary to render the same effect.

2. In any action or proceeding brought pursuant to section 528-13(P)(1), no person shall be entitled to contest the terms of the order sought to be enforced unless that person has timely commenced a proceeding for review of the order pursuant to section 528-13(O).

3. An action or proceeding may be commenced in any court of competent jurisdiction on behalf of the Commission for the recovery of the civil and criminal penalties provided for in this Article.

Q. Institution of Actions or Proceedings.

Where any of the provisions of this Article authorize an application to be made, or an action or proceeding to be commenced on behalf of the Commission in a court, such application may be made or such action or proceeding may be instituted only by the County Attorney, such attorneys that may be employed by the Commission as are designated by the County Attorney or other individuals designated by the County Attorney.

R. Civil Cause of Action.

1. Any individual, including an individual who has filed a complaint with the Commission, claiming to be aggrieved by an unlawful discriminatory practice as proscribed by this Article shall have a cause of action in any court of competent jurisdiction for damages, injunctive relief and such other remedies as may be appropriate; provided, however, that an individual who has filed a complaint with the Commission with respect to such alleged unlawful discriminatory practice withdraws the complaint so filed.

2. Notwithstanding any inconsistent provision of section 528-13(R), where a complaint filed with the Commission is dismissed pursuant to section 528-13(G) for administrative convenience, an individual shall maintain all rights to commence a civil action pursuant to this Article as if no such complaint has been filed.

3. A civil action commenced under this section 528-13(R) must be commenced within two (2) years after the alleged unlawful discriminatory practice occurred. Upon the filing of a complaint with the Commission and during the pendency of such complaint and any court proceeding for review of the dismissal of such complaint, such two-year limitation period shall be tolled.

4. Notwithstanding any inconsistent provision of this section 528-13(R), where a complaint filed with the Commission is dismissed for administrative convenience and such dismissal is due to the complainant's malfeasance, misfeasance or recalcitrance, the two-year limitation period on commencing a civil action pursuant to this section shall not be tolled.

5. Reasonable attorney's fees and costs may be awarded to a prevailing party in a civil action commenced pursuant to this section 528-13(R) in accordance with applicable provisions of state law.

S. Pattern and practice investigations by County Attorney.

1. Whenever there is reasonable cause to believe that a person is engaged in a pattern or practice that results in the denial to any individual of the full enjoyment of any right secured by this Article, a civil action on behalf of the Commission or the County may be commenced in a court of competent jurisdiction by filing a complaint setting forth facts pertaining to such pattern or practice and requesting such relief as may be deemed necessary to insure the full enjoyment of the rights described in this Article, including, but not limited to, injunctive relief, damages, and such other types of relief as are deemed appropriate. Nothing in this section 528-13(S) shall be construed to prohibit an individual from filing a complaint pursuant to section 528-13(A) or from commencing a civil action in a court of competent jurisdiction based upon the same facts pertaining to such pattern or practice as are alleged in the civil action, or the Commission from filing a Commission-initiated complaint pursuant to section 528-13(A) alleging a pattern or practice of discrimination, provided that a civil action pursuant to this subsection shall not have previously been commenced.

2. A civil action commenced under this section 528-13(S) must be commenced within two (2) years after the alleged discriminatory practice occurred.

3. Such action may be instituted only by the County Attorney, such attorneys employed by the Commission as are designated by the County Attorney or other individuals designated by the County Attorney.

§ 528-14. Damages and civil fines and penalties.

A. In any matter where the Executive Director finds that a person has engaged in an unlawful discriminatory practice, the Commission may award compensatory damages to the individual aggrieved by such practice; impose payment to the County general fund of profits obtained by a respondent through the commission of unlawful discriminatory acts; and impose civil fines and penalties in an amount not to exceed $50,000, to be paid to the County general fund by a respondent, or not to exceed $100,000 to be paid to the County general fund by a respondent found to have committed an unlawful discriminatory act which is found to be willful, wanton or malicious. In cases of housing discrimination only, punitive damages in an amount not to exceed $10,000 may be awarded to the individual aggrieved by such practice.

B. Any civil fines or penalties imposed pursuant to this section 528-14, shall be separately stated and shall be in addition to and not reduce or offset any other damages or payment imposed upon a respondent pursuant to this Article. In cases of employment discrimination where the employer has fewer than fifty (50) employees, such civil fine or penalty may be paid in reasonable installments, in accordance with regulations promulgated by the Commission. Such regulation shall require the payment of reasonable interest resulting from the delay and in no case permit installments to be made over a period longer than three (3) years.

C. In addition to any other penalties or sanctions which may be imposed pursuant to any other law, any person who knowingly makes a material false statement in any proceeding conducted, or document or record filed, with the Commission, or record required to be preserved or made and kept and subject to inspection by the Commission pursuant to this section shall be liable for a civil penalty in an amount up to $5,000.

D. In addition to any other penalties or sanctions which may be imposed pursuant to this Article or any other law, any person who shall willfully resist, prevent, impede or interfere with the Commission or any of its employees or representatives in the performance of duty under this Article, or who shall willfully violate an order of the Commission or Executive Director or conciliation agreement, shall be liable for a civil penalty of not more than $50,000 and an additional civil penalty of not more than $1,000 per day for each day that the violation continues.

§528-15. Attorney's fees.

Attorney's fees may be awarded by the Commission to a prevailing party under this Article in accordance with applicable provisions of state law.

§528-16. Enforcement.

A. Any action or proceeding that may be appropriate or necessary for the enforcement of any order issued by the Commission pursuant to this Article, shall be brought in the New York State Supreme Court, Suffolk County.

B. The County Attorney is hereby authorized to take such action as necessary to obtain enforcement of the provisions of this Article, including the enforcement of corrective orders and the assessment of penalties and fines as provided herein. Any action taken

by the Commission or the County Attorney under this Article shall not require resolution of the County Legislature.

§528-17. Construction.

This Article shall be construed liberally for the accomplishment of its purposes.

§528-18. Rules and regulations.

The Executive Director of the Suffolk County Human Rights Commission is hereby authorized, empowered, and directed to promulgate and issue such rules and regulations as shall be deemed necessary to carry out the provisions of this law. These rules shall include rules providing that the Commission shall be a party to all complaints and that a complainant shall be a party to a Commission-initiated complaint if the complainant has intervened in the manner set forth in the rules of the Commission. These rules shall also include rules governing discovery, sanctions for noncompliance with orders, motion practice and the issuance of subpoenas.

Section 3. Applicability.

This law shall apply to all complaints filed with the Commission or by the Commission on or after the effective date of this law.

Section 4. SEQRA Determination.

This Legislature, being the State Environment Quality Review Act (SEQRA) lead agency, hereby finds and determines that this law constitutes a Type II action pursuant to Section 617.5(c)(20) and/or (27) of Title 6 of the NEW YORK CODE OF RULES AND REGULATIONS (6 NYCRR) and within the meaning of Section 8-0109(2) of the NEW YORK ENVIRONMENTAL CONSERVATION LAW as a promulgation of regulations, rules, policies, procedures, and legislative decisions in connection with continuing agency administration, management and information collection. The Suffolk County Council on Environmental Quality (CEQ) is hereby directed to circulate any appropriate SEQRA notices of determination of nonapplicability or non-significance in accordance with this law.

Section 5. Severability.

If any clause, sentence, paragraph, subdivision, section, or part of this law or the application thereof to any person, individual, corporation, firm, partnership, entity, or circumstance shall be adjudged by any court of competent jurisdiction to be invalid or unconstitutional, such order or judgment shall not affect, impair, or invalidate the remainder thereof, but shall be confined in its operation to the clause, sentence, paragraph, subdivision, section, or part of this law, or in its application to the person, individual, corporation, firm, partnership, entity, or circumstance directly involved in the controversy in which such order or judgment shall be rendered.

Section 6. Effective Date.

This law shall take effect on the ninetieth (90th) day immediately subsequent to filing in the Office of the Secretary of State.

DATED:

APPROVED BY:

_____

County Executive of Suffolk County

Date:

OFFICE OF THE COUNTY LEGISLATURE

COUNTY OF SUFFOLK

GEORGE NOLAN
COUNSEL TO THE LEGISLATURE
email: george.nolan@suffolkcountyny.gov

WILLIAM H. ROGERS BUILDING
P.O. BOX 6100
HAUPPAUGE, NY 11788-0099
(631) 853-5494 (PHONE)
(631) 853-4415 (FAX)

DATE: June 9, 2014

TO: CLERK OF THE COUNTY LEGISLATURE

RE: MEMORANDUM OF COUNSEL TO THE LEGISLATURE PURSUANT TO RULE 28

PROPOSED LOCAL LAW YEAR 2014

TITLE: I.R. NO. -2014; A LOCAL LAW TO AMEND, UPDATE AND REORGANIZE CHAPTER 528 OF THE SUFFOLK COUNTY CODE TO INCORPORATE CHANGES ADOPTED BY THE STATE AND TO FACILITATE CONTINUING ADVANCEMENTS AND MODIFICATIONS IN THE FUTURE

SPONSOR: PRESIDING OFFICER ON REQUEST OF THE COUNTY EXECUTIVE

DATE OF RECEIPT BY COUNSEL: 6/9/14 **PUBLIC HEARING:** 7/29/14

DATE ADOPTED/NOT ADOPTED: _____ **CERTIFIED COPY RECEIVED:** _____

Chapter 528 of the SUFFOLK COUNTY CODE addresses acts of bias and discrimination that are impermissible in the County of Suffolk. This local law would repeal the existing Article II of that chapter, which addresses discriminatory acts, and establish new policies and procedures to expand the type of actions that are considered discriminatory and streamline complaint proceedings.

Currently, Article II of Chapter 528 prohibits discriminatory actions in places of public accommodation, resort or amusement, in employment, and in the sale, lease or rental of real property on the basis of group identity. Presently, "group identity", is defined as the race, color, religion, age, national origin, alienage or citizenship status, gender, sexual orientation, marital status or disability of an individual. This law would expand the definition of "group identity" to include the actual or perceived inclusion of a person in any of the above referenced categories and also include familial status[1] and military status as categories of group identity. The definition of "gender" is expanded to include gender identity, appearance, behavior or expression, regardless of its relation to the legal sex of an individual. The definition of "disability" is also changed to protect individuals suffering from alcoholism, drug addiction and substance abuse from discrimination provided they are in recovery and are currently free of such habits.

Beyond these definition changes, the proposed law makes significant changes in the existing areas of prohibited conduct. The changes in the area of employment discrimination are as follows:

- Victims of domestic violence will be afforded protection from existing prohibited discriminatory acts.

---

[1] Familial status is defined as individuals who are pregnant, have one or more children, or are in the process of securing custody of a minor, as well as minors who live with a parent, legal custodian or designee of a parent or legal custodian.

- Prohibit employers, labor organizations, employment agencies and committees on apprentice training from denying, or withholding the right to guidance programs or discriminating against individuals in such programs, based on group identity or domestic violence victim status.
- Prohibit employers from requiring pregnant employees to take a leave of absence unless the employee cannot perform the essential functions of their position and reasonable accommodations cannot be made without causing undue hardship on the employer.
- Protect breastfeeding mothers from being discriminated against by their employer with respect to break time for pumping.
- Require reasonable accommodations to individuals with known disabilities or pregnancy-related conditions in connection with jobs or training programs, unless the employer can demonstrate an undue hardship.
- Prohibit employers from imposing conditions that would violate an employee's religious beliefs, unless accommodations made in good faith fail or the employer can prove making such accommodations would pose an undue hardship.
- Prohibit fire departments or fire companies from discriminating against individuals based on their race, creed, color, national origin, sexual orientation, military status, gender or marital status.
- Prohibit denying an individual a license or employment by reason of a prior criminal offense or finding of a lack of "good moral character" based on such offenses.
- Prohibit, unless specifically required by law or permitted by statute, employers from inquiring about, or acting adversely upon, an individual for an arrest or criminal accusation against such individual that is no longer before the courts, or was terminated in favor of the individual, or for adjudications as a youthful offender.
- Employers will be held liable for the unlawful actions of an employee or agent provided the employer is a supervisor, knew of the conduct or should have known of the conduct.

The following changes would be made to the discrimination provisions associated with places of public accommodation, amusement or resort:

- Expand current law to protect individuals from being discriminated by a place of public accommodation based on their military status.
- Define unlawful discriminatory practice, for the purposes of this section, as: the refusal to make reasonable modifications to facilities unless they would fundamentally alter the nature of the service or constitute an undue burden; the failure to provide auxiliary aids and services to the disabled; the refusal to remove architectural or communication barriers; and the failure to make services available through alternative means if structural barriers cannot be moved.

The following changes would be made to the discrimination provisions associated with real property:

- Add buildings under construction, or not yet constructed, and vacant land to the types of property to which discrimination provisions apply.
- Prohibit discrimination against individuals based on their lawful source of income throughout.
- Prohibit realtors, salespersons, employees, agents or sellers from refusing to make a property available to an individual based on group identity, disability or lawful source of income.
- Amend the definition of reasonable accommodation to include modifications to common areas of a building.

- Prohibit individuals from inducing or attempting to induce the sale of a property for profit by making representations to potential sellers regarding the entry of a particular group into the neighborhood based on their group identity, status or lawful source of income.
- Prohibit persons from threatening the enjoyment of property owned by an individual based upon the individual's group identity, lawful source of income or the group identities of guests or visitors to such property.
- Prohibit real estate brokers, salespersons, employees and agents from refusing to sell, negotiating the sale of real property or representing that an available parcel is not available for inspection, based upon an individual's group identity or lawful source of income.

This law adds two new sections involving discriminatory acts. First, it will prohibit discrimination related to credit. Under the new law, creditors, officers, agents and employees would be prohibited from discriminating against individuals based on group identity when providing mortgage and home loans or when granting, withholding or fixing terms or rates of any form of credit. This law will also ban the use of credit applications that discriminate based on group identity. It would also be unlawfully discriminatory for credit providers to refuse to consider an individual's source of income or discount such income based on the individual's group identity. Discriminatory acts under this section would also include denying an applicant credit under circumstances where others would be approved based on group identity or adding special requirements or conditions for credit that would not otherwise be applied based on group identity. Actions will be considered non-discriminatory if they are based on factual, objective differences, provided the statistics relied on are not based solely on group identity or source of income in determining credit worthiness. Age may also be a non-discriminatory factor if there is a statistically rational relationship between age and credit worthiness. This law also adds a section to protect domestic workers from sexual harassment or harassment based on other characteristics which create a hostile work environment.

This law would also update provisions defining unlawful discriminatory practices. These would include: aiding and abetting in the commission of discriminatory acts outlined throughout the Article, retaliation based on opposition to practices forbidden under this Article, discrimination based on the use of a service animal, interference with the right to enjoy any of the rights protected under the Article and violation of conciliation agreements negotiated with the Human Rights Commission. This section will also allow religious and other organizations to limit participation in their activities to members or give preference to individuals of the same faith when providing services.

In addition to expanding the scope of conduct regulated by Chapter 528, this law also sets forth a more clearly defined procedure for resolving complaints made to the Human Rights Commission. Other changes to the procedures associated with Human Rights Commission complaints are as follows:

- Remove the list of required elements of the Commission's yearly report and individual case investigation reports.
- The requirements for following the determination of probable cause are streamlined to allow the Commission to issue written notice that probable cause exists, and to refer a complaint to an administrative law judge or the New York State Division of Human Rights, if appropriate. The Commission is further authorized to process complaints received from federal or state agencies pursuant to cooperation agreements.
- Remove the current election of remedies, which allows complainants to force the Commission to commence an action in a court of competent jurisdiction within 45 days of the complainant making the election.

- Give the Executive Director of the Human Rights Commission the power to enact appropriate relief according to the facts of the case, including the issuance of cease and desist orders; or ordering the hiring or reinstatement of an employee with or without back pay; ordering that a property be sold without discrimination; ordering compensatory damages or requiring the submission of reports by the respondent on compliance with the decision.
- Authorize the Commission to reopen, vacate or modify orders.
- Authorize the Commission to commence an action for an order to show cause for injunctive relief or a lis pendens on property when the respondent or their affiliates are found to be engaging in activity which renders relief ineffectual. The law also authorizes the Commission to post notice of a complaint on a property that is the subject of dispute or complaint.
- Allow a party aggrieved by a final order of the Human Rights Commission to seek judicial review in Suffolk County Supreme Court within 60 days of service of a final order by the Commission.
- Clarify that civil fines are separate and in addition to any other damages and allows for the development of a fine or penalty payment installment plan for employers with less than 50 employees.
- Authorize the Commission to award attorney's fees.
- Authorize the County Attorney to enforce Human Rights Commission orders, including enforcement of corrective orders.

The new Article II established by this law would apply to all complaints filed with the Commission or by the Commission on or after the effective date of this resolution. This law will take effect 90 days following its' filing in the Office of the Secretary of State.

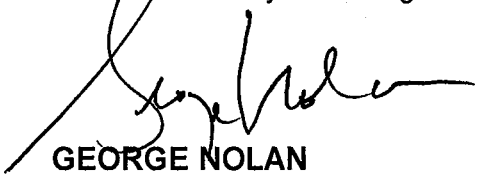

GEORGE NOLAN
Counsel to the Legislature

GN:SS

s:\rule28\28-human rights law discriminatory acts

1616

Intro. Res. No. ____-2014 Laid on Table 6/17/14

Introduced by the Presiding Officer, on request of the County Executive and Legislator Hahn

RESOLUTION NO. -2014, TO APPOINT MEMBER OF SUFFOLK COUNTY YOUTH BOARD COORDINATING COUNCIL REPRESENTING LEGISLATIVE DISTRICT #5 (ALYSSA TURANO)

WHEREAS, Section A3-5(E)(1) of the SUFFOLK COUNTY ADMINISTRATIVE CODE provides for the appointment of members of the Suffolk County Youth Board Coordinating Council, including eighteen members representing each of the County's Legislative Districts; and

WHEREAS, Legislator Hahn has recommended that Alyssa Turano, currently residing in Setauket, NY to be appointed to represent the 5th Legislative District on the Suffolk County Youth Board Coordinating Council; now, therefore be it

1st **RESOLVED**, that, Alyssa Turano currently residing in Setauket, NY is hereby appointed as a member of the Suffolk County Youth Board Coordinating Council to represent the 5th Legislative District on the Suffolk County Youth Board Coordinating Council for a term of three years commencing on the effective date of this resolution in accordance with Section A3-5(E)(3); and be it further

2nd **RESOLVED,** that this Legislature, being the State Environmental Quality Review Act (SEQRA) lead agency, hereby finds and determines that this resolution constitutes a Type II action pursuant to Section 617.5(c)(20), (21) and/or (27) of Title 6 of the NEW YORK CODE OF RULES AND REGULATIONS (6 NYCRR) and within the meaning of Section 8-0109(2) of the NEW YORK ENVIRONMENTAL CONSERVATION LAW as a promulgation of regulations, rules, policies, procedures, and legislative decisions in connection with continuing agency administration, management and information collection, and the Suffolk County Council on Environmental Quality (CEQ) is hereby directed to circulate any appropriate SEQRA notices of determination of non-applicability or non-significance in accordance with this resolution.

DATED:

APPROVED BY:

_____

Steven Bellone
County Executive of Suffolk County

Date:

1616

COUNTY OF SUFFOLK

KARA HAHN
LEGISLATOR, FIFTH DISTRICT

COMMITTEE CHAIR
ENVIRONMENT, PLANNING
& AGRICULTURE

VICE-CHAIR
PARKS & RECREATION

MEMBER
GOVERNMENT OPERATIONS,
PERSONNEL, HOUSING &
CONSUMER PROTECTION
PUBLIC SAFETY
ECONOMIC DEVELOPMENT
& ENERGY

COUNTY LEGISLATURE

February 11, 2014

Tim Laube, Clerk of the Legislature
William H. Rogers Building
Hauppauge, New York

Dear Mr. Laube:

I am writing to formally notify you that I am appointing Alyssa Turano to the Suffolk County Youth Board Coordinating Council as my designee for the 5th Legislative District.

If you need any additional information about this member, please do not hesitate to contact me.

Sincerely,

Kara Hahn
Suffolk County Legislator
Fifth District

306 MAIN STREET
PORT JEFFERSON, NEW YORK 11777

KARA.HAHN@SUFFOLKCOUNTYNY.GOV

PHONE: (631) 854-1650
FAX: (631) 854-1653

Alyssa Turano

Address: [illegible] l, Setauket, NY 11733
Phone Number: (631) [illegible]
Email: [illegible]

RELEVANT EXPERIENCE

Legislative Aide — **February 2012-Present**
Suffolk County Legislature- Legislator Kara Hahn, Port Jefferson, NY

- Develop and implement policy objectives, propose strategies pass proposed legislation; and advising on political and community issues
- Liaise, maintain relationships for and represent the Legislator with all levels of government including Federal, State and Town as well as civic organizations, chambers of commerce, community organizations and constituents

Assistant Campaign Manager — **July 2011- Present**
Kara Hahn Suffolk County Legislature, Setauket, NY

- Organize and correspond with volunteers, create literature, organize Kara's calendar, in charge of mailings, organized fundraisers and rallies.

Food Policy Council — **October 2012-Present**
Secretary, Hauppauge, NY

- Create and disseminate agendas for each meeting
- Keep the records of whose a Council Member and arrange for new members to be appointed if necessary
- Take minutes at every meeting and distribute an annotated agenda after each meeting

High Point University, Office of Annual Giving — **September 2009 – May 2011**
Phone-A-Thon Caller, High Point, NC

- Utilize strong interpersonal communication and persuasive speaking abilities in calling alumni/parents explaining the benefits of the University and asking for donations/gifts to the University

High Point University — **January 2008 – December 2009**
Office Assistant, High Point, NC

- Served as a valuable team member in assisting professors with a variety of administrative office procedures in including handling records, making photocopies, etc.

EDUCATION

High Point University, High Point, NC — **May 2011**
B.A., **French**
B.A., **International Studies**
Pi Delta Phi – National French Honor Society — **2008**
Phi Sigma Iota – International Foreign Language Honor Society — **2008**

VOLUNTEER EXPERIENCE

Stony Brook Train Station Annual Spring and Fall Cleanup — **October 2011-Present**
Secured plants donated for the cleanups and oversaw volunteers
Walk for Beauty Committee — **May 2012-Present**
Committee member- handed out fliers for the event and organized volunteers the during the event

ACCOLODES

National Association of Counties Achievement Award — **July 2013**
For contributing to the Suffolk County Sheriff's Youth Re-entry Task Force
East End Democratic Women, Woman of Distinction Award — **February 2012**
For work on Suffolk County Legislator Kara Hahn's 2011 campaign
R. Sherman Young Historian Award — **2006**
For outstanding contributions to the Three Village Historical Society by a young person

OFFICE OF THE SUFFOLK COUNTY LEGISLATURE

Sarah S. Anker

Suffolk County Legislator, 6th District
Committees:
Chairwoman of Education & Information Technology • Vice Chairwoman of Budget and Finance
Veterans & Seniors • Environment, Planning and Agriculture

March 7, 2014

Roderick A. Pearson
Executive Director
Office of Minority Affairs
H. Lee Dennison Building
Third Floor,
Hauppauge, NY 11788

Dear Mr. Pearson,

It is my honor and privilege to appoint Miller Place resident Janene Gentile to the Suffolk County Youth Board Coordinating Council.

Ms. Gentile has been the Executive Director of the North Shore Youth Council since 1993, where she has implemented innovative youth, family and community social program materials to support anti-violence, drug and alcohol-free initiatives. For more than 20 years, Janene has been a moving force in the community, working to ensure that the safety and wellness of the children in the Rocky Point, Miller Place, Mount Sinai, and Shoreham-Wading River School Districts.

Janene strives to create a community that our youth can be proud of. Some of Janene's many youth initiatives include a movement for artistic murals throughout the north shore in an effort to prevent graffiti and to encourage the artistic talents of local students, "Big Buddy-Little Buddy" mentorship programs, and assisting military veterans with finding education and employment opportunities.

Janene Gentile is truly an asset to our community and I am proud to appoint her to the Suffolk County Youth Board Coordinating Council. I have attached Ms. Gentile's resume and contact information to this letter. Please don't hesitate to contact my office at 631-854-1600 if you have any questions.

Sincerely,

Sarah S. Anker
Suffolk County Legislator
Sixth District

SA/kt

CC:
Presiding Officer Gregory, Suffolk County Legislature
Tim Laube, Clerk of the Legislature

620 Route 25A, Suite B, Mt. Sinai, NY 11766 • 631-854-1600 • Fax 631-854-1603
Sarah.Anker@suffolkcountyny.gov

1617

Intro. Res. No. ____-2014 Laid on Table 6/17/14

Introduced by the Presiding Officer, on request of the County Executive and Legislator Kennedy

RESOLUTION NO. -2014, TO APPOINT MEMBER OF SUFFOLK COUNTY YOUTH BOARD COORDINATING COUNCIL REPRESENTING LEGISLATIVE DISTRICT #12 (BRITTANY BIENEMANN)

WHEREAS, Section A3-5(E)(1) of the SUFFOLK COUNTY ADMINISTRATIVE CODE provides for the appointment of members of the Suffolk County Youth Board Coordinating Council, including eighteen members representing each of the County's Legislative Districts; and

WHEREAS, Legislator Kennedy has recommended that Brittany Bienemann, currently residing in Smithtown, NY to be appointed to represent the 12th Legislative District on the Suffolk County Youth Board Coordinating Council; now, therefore be it

1st **RESOLVED**, that, Brittany Bienemann currently residing in Smithtown, NY is hereby appointed as a member of the Suffolk County Youth Board Coordinating Council to represent the 12th Legislative District on the Suffolk County Youth Board Coordinating Council for a term of three years commencing on the effective date of this resolution in accordance with Section A3-5(E)(3); and be it further

2nd **RESOLVED,** that this Legislature, being the State Environmental Quality Review Act (SEQRA) lead agency, hereby finds and determines that this resolution constitutes a Type II action pursuant to Section 617.5(c)(20), (21) and/or (27) of Title 6 of the NEW YORK CODE OF RULES AND REGULATIONS (6 NYCRR) and within the meaning of Section 8-0109(2) of the NEW YORK ENVIRONMENTAL CONSERVATION LAW as a promulgation of regulations, rules, policies, procedures, and legislative decisions in connection with continuing agency administration, management and information collection, and the Suffolk County Council on Environmental Quality (CEQ) is hereby directed to circulate any appropriate SEQRA notices of determination of non-applicability or non-significance in accordance with this resolution.

DATED:

APPROVED BY:

_____

Steven Bellone
County Executive of Suffolk County

1617

SUFFOLK COUNTY LEGISLATURE
COUNTY OF SUFFOLK

JOHN M. KENNEDY, JR.
LEGISLATOR, 12TH DISTRICT
CHAIRMAN
REPUBLICAN CAUCUS

COMMITTEES
WAYS AND MEANS
PUBLIC SAFETY
ECONOMIC DEVELOPMENT
BUDGET & FINANCE

April 25, 2014

Roderick Pearson
Executive Director
Suffolk County Youth Services
P.O. Box 6100
100 Veterans Memorial Hwy
Hauppauge , NY 11787

Re: Brittany Bienemann

Dear Roderick Pearson:

I write today to recommend Brittany Bienemann as the 12th Legislative District appointee to the Suffolk County Youth Board Coordinating Council. Brittany has been an outstanding member of the Smithtown community, having served as a Volunteer for the Smithtown Kickers Special Soccer, participating in the Relay for Life raising money for the American Cancer Society and interning at my Legislative office

In addition to her extensive community service, Ms. Bienemann is very active in school as a member of the Smithtown High School West Varsity Girls' Soccer Team serving as Team Captain. Furthermore, Brittany has earned high honors in the National, Spanish, Math Honor Societies.

Ms. Bienemann is an outstanding example of an accomplished young person, loving daughter and sister, and a committed young prodigy, willing to work on behalf of the issues that confront all Suffolk County Youth every day. I am honored to recommend her as my appointee to the Suffolk County Youth Board Coordinating Council.

Sincerely,

John M. Kennedy, Jr.

725 VETERANS MEMORIAL HIGHWAYAY, BUILDING 17 • HAUPPAUGE, NY 11788 • TELEPHONE (631) 854-3735 • FAX (631) 854-3744
MAILING ADDRESS: PO BOX 6100 • HAUPPAUGE, NY 11788
E-MAIL: JOHN.KENNEDY@SUFFOLKCOUNTYNY.GOV
FACEBOOK.COM/JOHNMKENNEDYJR

Brittany Bienemann

Smithtown, NY 11787 • Phone: 631- • E-mail:

Academics

- GPA: 4.09, SAT: 2040, ACT: 32
- 2013-2014, 11th Grade: AP US History, Honors Intro to Calculus, AP Language & Composition, AP Physics, Select Symphonic Band
- 2012-2013, 10th Grade: AP World History, Honors Algebra II and Trigonometry, Honors English 10, AP Biology, Select Symphonic Band
- 2011-2012, 9th Grade: Pre-AP World History, Honors Geometry, Honors English 9, Honors Earth Science, Concert Band

Awards

- Certificate for Merit: Outstanding Performance on the 2013 Suffolk County Mathematics Contest
- Smithtown HS West Business Award: For outstanding performance in Intro to Business
- All- League Player Award: For my performance during the varsity soccer season
- All- Conference Player Award: For my performance during the varsity soccer season
- Outstanding Performance Rating on trumpet solo at the NYSSMA Festival '12, '13, '14

School Clubs

- National Honor Society '14
- Spanish Honor Society '13, '14
- Math Honor Society '14
- Brass Ensemble '12, '13, '14
- Junior Class Council '13, '14

Community Service

- Smithtown Kicks Special Soccer Volunteer
- Participated in Relay for Life and Raised money for the American Cancer Society
- Intern for Suffolk County Legislator John M. Kennedy Jr.

Athletics

- SHS West Varsity Girl's Soccer 2011- Present: Team Captain 2013-2014
- Brentwood SC Pride 97 2013- Present
- Smithtown Kickers Fire 2008- 2013
- Long Island Rough Riders U16 Team 2010-2014: Team Captain 2011-2014, Trained and played in Italy, Germany, Austria, and Spain

1618

Intro. Res. No. ____-2014 Laid on Table 6/17/14

Introduced by the Presiding Officer, on request of the County Executive and Legislator Trotta

RESOLUTION NO. -2014, TO APPOINT MEMBER OF SUFFOLK COUNTY YOUTH BOARD COORDINATING COUNCIL REPRESENTING LEGISLATIVE DISTRICT #13 (DEBORAH DELANEY)

WHEREAS, Section A3-5(E)(1) of the SUFFOLK COUNTY ADMINISTRATIVE CODE provides for the appointment of members of the Suffolk County Youth Board Coordinating Council, including eighteen members representing each of the County's Legislative Districts; and

WHEREAS, Legislator Trotta has recommended that Deborah Delaney, currently residing in Kings Park, NY to be appointed to represent the 13th Legislative District on the Suffolk County Youth Board Coordinating Council; now, therefore be it

1st **RESOLVED**, that, Deborah Delaney currently residing in Kings Park, NY is hereby appointed as a member of the Suffolk County Youth Board Coordinating Council to represent the 13th Legislative District on the Suffolk County Youth Board Coordinating Council for a term of three years commencing on the effective date of this resolution in accordance with Section A3-5(E)(3); and be it further

2nd **RESOLVED,** that this Legislature, being the State Environmental Quality Review Act (SEQRA) lead agency, hereby finds and determines that this resolution constitutes a Type II action pursuant to Section 617.5(c)(20), (21) and/or (27) of Title 6 of the NEW YORK CODE OF RULES AND REGULATIONS (6 NYCRR) and within the meaning of Section 8-0109(2) of the NEW YORK ENVIRONMENTAL CONSERVATION LAW as a promulgation of regulations, rules, policies, procedures, and legislative decisions in connection with continuing agency administration, management and information collection, and the Suffolk County Council on Environmental Quality (CEQ) is hereby directed to circulate any appropriate SEQRA notices of determination of non-applicability or non-significance in accordance with this resolution.

DATED:

APPROVED BY:

_____

Steven Bellone
County Executive of Suffolk County

Date:

1618

OFFICE OF THE COUNTY LEGISLATURE
COUNTY OF SUFFOLK

ROBERT TROTTA
LEGISLATOR, 13TH DISTRICT

59 LANDING AVENUE
SMITHTOWN, NY 11787
(631) 854-3900
FAX (631) 854-3903
e-mail: Robert.Trotta@suffolkcountyny.gov

March 27, 2014

The Honorable DuWayne Gregory
Presiding Officer
Suffolk County Legislature
P.O. Box 6100
Hauppauge, New York 11788-0099

Dear Presiding Officer Gregory:

As the legislator for the 13th Legislative District, I would like to appoint Debbie Danley of in Kings Park as my representative to serve on the Suffolk County Youth Board.

Ms. Danley is Executive Director of Kings Park in the kNOw and is a former president of the Fort Salonga PTA. I believe that her background and experience with our youth and with her local school district will make her an asset to the Board. Her resume is attached.

Thank you for your attention to this request.

Sincerely,

Robert Trotta
Suffolk County Legislator
13th Legislative District

CC: Tim Laube, Clerk of the Legislature
Rev. Roderick Pearson
Debbie Danley

RT: see

Attachment (1)

DEBORAH L. DANLEY
1 Commack Road
Kings Park, NY 11754
631

SUMMARY

To serve as a board member where I can utilize my passion for our community and youth to ensure Suffolk County offers cost effective, creative opportunities for our youngest residents.

EXPERIENCE

Executive Director, Kings Park in the kNOw **2008 – Present**

- Responsibilities include organizing monthly meetings, managing the budget and fundraising
- Host community and youth events, working with our local school district, residents and businesses with a goal of keeping our children and our town drug-free
- Work with law enforcement officials, collect anonymous tips and work to eradicate illegal drugs

Vice President Kings Park School District Council of Schools **2010-2012**

- Responsibilities include overseeing work of specific committees
- United different Parent-Teacher Associations with a purpose of working together, sharing resources and creative ideas
- Attend training and workshops
- Organizing fundraising events
- Host student and family activities
- Act as an aide to the president, report to membership and work with administrators, students and families within the confines of organization's By-Law

President, Fort Salonga PTA **2008 -2012**

- Responsibilities include coordinating and presiding over monthly meetings
- Construct budget and proposed annual budget vote
- Attend training and workshops and organize fundraising events
- Hosts student and family activities
- Coordinate efforts of Executive Board, report to membership and work with administration, students and families within the confines of organization's By-Laws

EDUCATION

- Associates Degree, Suffolk County Community College 1994-1997
- Regents High Scho9l Diploma, St. John the Baptist High School

1619

Intro. Res. No. ____-2014 Laid on Table 6/17/14

Introduced by the Presiding Officer, on request of the County Executive and Legislator Spencer

RESOLUTION NO. -2014, TO APPOINT MEMBER OF SUFFOLK COUNTY YOUTH BOARD COORDINATING COUNCIL REPRESENTING LEGISLATIVE DISTRICT #18 (REVEREND DR. LARRY WASHINGTON)

WHEREAS, Section A3-5(E)(1) of the SUFFOLK COUNTY ADMINISTRATIVE CODE provides for the appointment of members of the Suffolk County Youth Board Coordinating Council, including eighteen members representing each of the County's Legislative Districts; and

WHEREAS, Legislator Spencer has recommended that Reverend Dr. Larry Washington, currently residing in Huntington, NY to be appointed to represent the 18th Legislative District on the Suffolk County Youth Board Coordinating Council; now, therefore be it

1st **RESOLVED**, that, Reverend Dr. Larry Washington currently residing in Huntington, NY is hereby appointed as a member of the Suffolk County Youth Board Coordinating Council to represent the 18th Legislative District on the Suffolk County Youth Board Coordinating Council for a term of three years commencing on the effective date of this resolution in accordance with Section A3-5(E)(3); and be it further

2nd **RESOLVED,** that this Legislature, being the State Environmental Quality Review Act (SEQRA) lead agency, hereby finds and determines that this resolution constitutes a Type II action pursuant to Section 617.5(c)(20), (21) and/or (27) of Title 6 of the NEW YORK CODE OF RULES AND REGULATIONS (6 NYCRR) and within the meaning of Section 8-0109(2) of the NEW YORK ENVIRONMENTAL CONSERVATION LAW as a promulgation of regulations, rules, policies, procedures, and legislative decisions in connection with continuing agency administration, management and information collection, and the Suffolk County Council on Environmental Quality (CEQ) is hereby directed to circulate any appropriate SEQRA notices of determination of non-applicability or non-significance in accordance with this resolution.

DATED:

APPROVED BY:

_____

Steven Bellone
County Executive of Suffolk County

Date:

1619

SUFFOLK COUNTY LEGISLATURE
COUNTY OF SUFFOLK

WILLIAM R. SPENCER, M.D.
LEGISLATOR 18TH DISTRICT

CHAIR
HEALTH COMMITTEE

VICE-CHAIR
GOVERNMENT OPERATIONS, PERSONNEL, HOUSING, & CONSUMER PROTECTION COMMITTEE

MEMBER
PUBLIC SAFETY COMMITTEE

15 PARK CIRCLE, SUITE 209
CENTERPORT, N.Y.
11721

PHONE: (631) 854-4500
FAX: (631) 854-4503

E-MAIL: william.spencer@suffolkcountyny.gov
WEBSITE: http://legis.suffolkcountyny.gov/do/do18/do18.html

June 4, 2014

Mr. Roderick Pearson, Executive Director
Suffolk County Youth Board
PO Box 6100
Hauppauge, NY 11788

Dear Mr. Pearson,

Please allow me to introduce Reverend Dr. Larry Washington as a potential candidate to fill the vacancy on the Suffolk County Youth Board. You will see by his resume, which is enclosed, that he has spent an inordinate amount of time working with young people. Without equivocation, I would like to recommend him as my representative to the Youth Board.

Thank you for your attention to this letter. Please feel free to call me if you have any questions.

Sincerely,

William R. Spencer, M.D.
Suffolk County Legislator
18th Legislative District

WRS:lmg

Reverend Dr. Larry Washington

Huntington, New York, 11743

(631) Home or (631)

SUMMARY

Highly skilled **Director** of community programs with two decades of experience and **Pastor** servicing a congregation of 500 members.

SKILLS AND ABILITIES

Direct and supervise public religious instruction.
Conduct individual and group counseling for youth and adults in all areas of life skills and financial planning.
Direct and oversee the duties and responsibilities of all officers of the church.
Responsible for accounting and distribution of payroll, petty cash and other major expenditures.
Hired, trained and supervised staff for the Town of Huntington youth programs
Functioned as liaison between the community and college enrichment programs
Developed a town-wide council of agencies and school district personnel to encourage, foster and coordinate mentoring programs in Huntington.
Performed needs assessment focus groups with various segments of the community.
Provided case management services to elementary age children.
Responsible for proposal development and grant writing.

PROFESSIONAL EXPERIENCE

Pastor-Evergreen Missionary Baptist Church (Huntington, NY) **1986-Present**

Director/Coordinator- Town of Huntington (Huntington, NY)

- **Director of College Enrichment** **1997-1999**
- **Coordinator of Mentoring Services/Youth Worker** **1997-1998**
- **Prevention Specialist/Project PACE** **1994-1997**

Director-Project Upward Bound (New York) **1977-1991**

1990-1991	Dowling College, Oakdale, New York
1989-1990	Queens College, Flushing, New York
1977-1984	Dowling College, Oakdale, New York

EDUCATION

Master of Theological Studies, 2005- Faith Evangelical Lutheran Seminary (Tacoma, Washington)
Honorary Doctorate of Divinity, 1990- National Theological Seminary (St. Louis, Missouri)
Masters of Elementary Education, 1981- Dowling College (Oakdale, New York)
Bachelors of Science, 1976- Xavier University (New Orleans, Louisiana)
Public School Teacher Certificate-University of the State of New York (New York)

Affiliations

Huntington Station Enrichment Center, Board of Directors and Chairman of Advisory Board since 1993.

NAACP, Huntington branch, Member since 1977.

NAACP, Life Member.

Alpha Phi Alpha Fraternity, Eta Theta Lambda Chapter, Member since 1982.

Honorable order of the Masons, David W. Parker Lodge No. 72, member since 1972

Interdenominational Black Clergy of Huntington, Vice President since 1996.

Eastern Baptist Association, Member since 1969-

Vice Moderator for the Suffolk County branch.

Executive Board Member of the Black and Hispanic Democratic Party of Suffolk County.

National Baptist Convention, Member since 1987.

International Federation of Christian Chaplains,Inc.

1620

Intro. Res. No. -2014 Laid on Table 6/17/14

Introduced by Presiding Officer on request of the County Executive

RESOLUTION NO. -2014, ADOPTING LOCAL LAW NO. -2014, A LOCAL LAW TO AMEND, UPDATE AND REORGANIZE CHAPTER 528 OF THE SUFFOLK COUNTY CODE TO INCORPORATE CHANGES ADOPTED BY THE STATE AND TO FACILITATE CONTINUING ADVANCEMENTS AND MODIFICATIONS OF THE LAW IN THE FUTURE

WHEREAS, there was duly presented and introduced to this County Legislature at a regular meeting held on , 2014, a proposed local law entitled, " **A LOCAL LAW TO AMEND, UPDATE AND REORGANIZE CHAPTER 528 OF THE SUFFOLK COUNTY CODE TO INCORPORATE CHANGES ADOPTED BY THE STATE AND TO FACILITATE CONTINUING ADVANCEMENTS AND MODIFICATIONS OF THE LAW IN THE FUTURE**;" and said local law in final form is the same as when presented and introduced; now, therefore be it

RESOLVED, that said local law be enacted in form as follows:

LOCAL LAW NO. -2014, SUFFOLK COUNTY, NEW YORK

A LOCAL LAW TO AMEND, UPDATE AND REORGANIZE CHAPTER 528 OF THE SUFFOLK COUNTY CODE TO INCORPORATE CHANGES ADOPTED BY THE STATE AND TO FACILITATE CONTINUING ADVANCEMENTS AND MODIFICATIONS OF THE LAW IN THE FUTURE

BE IT ENACTED BY THE COUNTY LEGISLATURE OF THE COUNTY OF SUFFOLK, as follows:

Section 1. Legislative Intent.

The Suffolk County Legislature hereby finds and determines that in the County of Suffolk, with its diverse population, there is no greater danger to the health, safety, and welfare of the County and its inhabitants than the existence of groups and individuals reflecting prejudice and antagonism toward each other because of actual or perceived differences.

The Legislature also finds that prejudice and discrimination creates economic instability by limiting individuals' access to quality education, health care, housing and job opportunities.

The Legislature further finds and declares that acts of prejudice, intolerance, bigotry, and discrimination deny opportunities to persons, threaten the fundamental rights and privileges of the inhabitants of the County of Suffolk and undermine the foundations of a free democratic state and the economic stability of the region.

The Legislature further declares it to be the public policy of the County of Suffolk to eliminate and prevent discrimination and to safeguard the right of every person to live and work in Suffolk County without regard to actual or perceived race, color, creed, gender, alienage or citizenship status, disability, familial status, marital status, military status, sexual orientation, age, national origin, income source or status as a victim of domestic violence.

Therefore, the purpose of this law is to update the Suffolk County Human Rights Law to include a comprehensive administrative process, to incorporate changes adopted by the State, to reorganize the Suffolk County law in an effort to make it more user-friendly, to ensure that prejudice, intolerance, bigotry and discrimination will not threaten the rights of Suffolk County inhabitants and to promote the principles of equality and inclusion.

Section 2. Amendments.

Article II of Chapter 528 of the SUFFOLK COUNTY CODE is hereby deleted in its entirety and replaced with the following:

Chapter 528
HUMAN RIGHTS
***

Article II. Unlawful Discriminatory Acts.

§ 528-5. Policy.

Each year a number of Suffolk County residents are subject to incidents of violence and other acts of prejudice committed in Suffolk County based upon actual or perceived differences, including those based on race, color, gender, creed, national origin, age, alienage or citizenship status, sexual orientation, disability, marital status, familial status, military status, source of income, or status as a victim of domestic violence. Such acts of prejudice, intolerance, bigotry, discrimination, and disorder threaten the rights and proper privileges of the County's inhabitants and create a danger to the health, safety and welfare of the County and its inhabitants. Therefore, the purpose of this Article is to create a mechanism to eliminate and prevent discrimination from playing any role in actions that occur within Suffolk County relating to employment, public accommodations, housing and other real estate, and to take other actions against prejudice, intolerance, bigotry, discrimination and bias-related violence or harassment.

§ 528-6. Definitions.

As used in this Article, the following terms shall have the meanings indicated:

AGENT

Any person or entity, whether or not for financial consideration, with the authority to engage in any act on behalf of an employer or property owner, or other person or entity in control of such accommodation. The term "agent" shall include, but not be limited to, a real estate salesperson or real estate broker.

ALIENAGE OR CITIZENSHIP

A. The citizenship of any individual; or

B. The immigration status of any individual legally eligible to be employed within the United States and who is not a citizen or national thereof.

COMMERCIAL SPACE

Any space in a building, structure, or portion thereof which is used or occupied or is intended, arranged or designed to be used or occupied for the manufacture, sale, resale, processing, reprocessing, displaying, storing, handling, garaging or distribution of personal property; and any space which is used or occupied, or is intended, arranged or designed to be used or occupied, as a separate business or professional unit or office in any building, structure or portion thereof.

COMMISSION

The Suffolk County Human Rights Commission.

COUNTY

The County of Suffolk.

COVERED ENTITY

A person required to comply with any provision of this Article.

CREDIT

The right conferred upon an individual by a creditor to incur debt and defer its payment whether or not any interest or finance charge is made for the exercise of this right.

CREDITOR

Any person or financial institution which does business in this state and which extends credit or arranges for the extension of credit by others. The term creditor includes, but is not limited to, banks and trust companies, private bankers, foreign banking corporations and national banks, savings banks, licensed lenders, savings and loan associations, credit unions, sales finance companies, insurance premium finance agencies, insurers, credit card issuers, mortgage brokers, mortgage companies, mortgage insurance corporations, wholesale and retail merchants and factors, whatever the form of their organization.

DEMONSTRATES

Meeting the burdens of production and persuasion.

DISABILITY

A. (1) A physical, mental, or medical impairment resulting from an anatomical, physiological, genetic or neurological condition which prevents the exercise of a normal bodily function or is demonstrable by medically accepted clinical or laboratory diagnostic techniques; or (2) a record of such an impairment.

B. In the case of alcoholism, drug addiction or other substance abuse, the term "disability" shall only apply to an individual who: (1) is recovering or has recovered and (2) currently is free of such abuse, and shall not include an individual who is currently engaged in the illegal use of drugs, when the covered entity acts on the basis of such use.

DOMESTIC WORKER

As defined in section 2 in the New York State Labor Law, as same may be amended from time to time.

EMPLOYEE

Shall not include any individual employed by his or her parents, spouse or child, or in the domestic service of any person, except as set forth in section 528-11.

EMPLOYER

As defined in §292 of the New York Executive Law, as same may be amended from time to time.

EMPLOYMENT AGENCY

Any person undertaking to procure employees or opportunities to work.

ESSENTIAL FUNCTIONS

The fundamental job duties of employment position held. The term "essential functions" does not include the marginal functions of the position. A job function may be considered essential for any of several reasons, including, but not limited to, any one or more of the following: (A) the reason the position exists is to perform that function; (B) the limited number of employees available among whom the performance of that job function can be distributed; and (C) the function is highly specialized, so that the incumbent in the position is hired for his or her expertise or ability to perform the particular function.

FAMILIAL STATUS

A. Any individual who is pregnant or has a child or is in the process of securing legal custody of any individual who has not attained the age of eighteen years; or

B. One or more individuals (who have not attained the age of eighteen years) being domiciled with:

1. A parent or another individual having legal custody of such individual or individuals; or

2. The designee of such parent or other individual having custody.

GENDER

Actual or perceived sex of an individual, or an individual's gender identity, self-image, appearance, behavior or expression whether or not it is different from that traditionally associated with the legal sex assigned to that individual at birth.

GROUP IDENTITY

The actual or perceived race, color, creed, age, national origin, alienage or citizenship status, gender, sexual orientation, disability, marital status, or familial status of any individual, as well as the actual military status of any individual.

GUIDE DOG

Any dog that is trained to aid an individual who is blind by a recognized guide dog training center or professional guide dog trainer, and is actually used for such purpose.

HEARING DOG

Any dog that is trained to aid an individual with a hearing impairment by a recognized hearing dog training center or professional hearing dog trainer, and is actually used for such purpose.

HOUSING ACCOMMODATION

Includes publicly assisted housing accommodations, any building, structure, or portion thereof which is used or occupied or is intended, arranged or designed to be used or occupied as the home, residence or sleeping place of one or more human beings, and any vacant land offered for sale or lease for the construction or location thereon of any such buildings, structure, or portion thereof.

LABOR ORGANIZATION

Any organization which exists and is constituted for the purpose, in whole or in part, of collective bargaining or of dealing with employers concerning grievances, terms or conditions of employment, or of mutual aid or protection in connection with employment.

LAWFUL SOURCE OF INCOME

Includes, but is not limited to, income derived from Social Security, or any form of federal, state or local public assistance or housing assistance including the Housing Choice Voucher Program.

MILITARY STATUS

An individual's participation in the military service of the United States or the military service of the state, including, but not limited to, the armed forces of the United States, the Army National Guard, the Air National Guard, the New York Naval Militia, the New York Guard, and such additional forces as may be created by the federal or state government as authorized by law.

MULTIPLE DWELLING

Includes a dwelling which is occupied primarily for permanent residence purposes and which is either rented, leased, let or hired out to be occupied as the residence or home of three or more families living independently of each other. A multiple dwelling shall not be deemed to include a hospital, convent, monastery, asylum, or public institution, or a fireproof building used wholly for commercial purposes except for not more than one janitor's apartment and not more than one penthouse occupied by not more than two families. The term "family" as used herein, means either an individual occupying a dwelling and maintaining a household, with not more than four boarders, roomers or lodgers, or two or more individuals occupying a dwelling, living together and maintaining a household, with not more than four boarders, roomers or lodgers, or two or more individuals occupying a dwelling, living together and maintaining a common household, with not more than four boarders, roomers or lodgers. A "boarder," "roomer" or "lodger" residing with a family means an individual living within the household who pays a consideration for such residence and does not occupy such space within the household as an incident of employment therein.

NATIONAL ORIGIN

Includes "ancestry."

PERSON

Includes one or more natural persons, proprietorships, limited liability companies, partnerships, associations, group associations, organizations, corporations of all types, governmental bodies or agencies, mutual companies, joint-stock companies, trusts, unincorporated associations, legal representatives, trustees, trustees in bankruptcy, fiduciary receivers, or receivers.

PLACE OF PUBLIC ACCOMMODATION, RESORT OR AMUSEMENT

Except as hereinafter specified, includes providers, whether licensed or unlicensed, of goods, services, facilities, accommodations, advantages and privileges of any kind, and places, whether licensed or unlicensed, where goods, services, facilities, accommodations, advantages and privileges of any kind are extended, offered, sold, consumed or otherwise made available to the public.

A. Such term shall not include public libraries, kindergartens, primary and secondary schools, high schools, academies, colleges and universities, professional schools, extension courses, and any educational institutions under the supervision of the regents of the State of New York; any public library, kindergarten, primary and secondary school, high school, academy, college, university, professional school, extension course or other educational facility supported in whole or in part by public funds or contributions solicited from the general public; any club or organization which by its nature is distinctly private, but no such club or organization shall be considered by its nature distinctly private if:

1. It has more than one hundred (100) members;

2. It provides regular meal service; and

3. It regularly receives payment for dues, fees, use of space, facilities, services, meals or beverages directly or indirectly from or on behalf of nonmembers for the furtherance of trade or business.

B. A corporation incorporated under the New York Benevolent Orders Law or described in the New York Benevolent Orders Law, but formed under any other law of this state, or a religious corporation incorporated under the New York Education Law or the New York Religious Corporations Law shall be deemed to be in its nature distinctly private. No institution, club, organization or place of accommodation which sponsors or conducts any amateur athletic contest or sparring exhibition and advertises or bills such contest or exhibition as a New York State championship contest or uses the words "New York State" in its announcements shall be considered by its nature distinctly private within the meaning of this Article.

PREGNANCY-RELATED CONDITION

A physical or mental condition intrinsic to pregnancy or childbirth, and includes the expression of breast milk by nursing mothers.

PREMIUM WAGES

Includes overtime pay and compensatory time off, and additional remuneration for night, weekend or holiday work, or for standby or irregular duty.

PREMIUM BENEFIT

An employment benefit, such as seniority, group life insurance, health insurance, disability insurance, sick leave, annual leave, or an educational or pension benefit that is greater than the employment benefit due the employee for an equivalent period of work performed during the regular work schedule of the employee.

PUBLICLY ASSISTED HOUSING ACCOMMODATIONS

All housing accommodations within Suffolk County in:

A. Publicly owned or operated housing accommodations;

B. Housing operated by housing companies under the supervision of the State Commissioner of Housing;

C. Housing constructed after July 1, 1950, within Suffolk County and which is either:

1. Exempt in whole or in part from taxes levied by the state or any of its political subdivisions;

2. Constructed on land sold below cost by the state or any of its political subdivisions or any agency thereof, pursuant to the Federal Housing Act of 1949;

3. Constructed in whole or in part on property acquired or assembled by the state or any of its political subdivisions or any agency thereof through the power of condemnation or otherwise for the purpose of such construction; or

4. Acquired, constructed, repaired or maintained with funds or financial assistance furnished or contributed by the state, any political subdivision of the state, or any agency or authority of the state.

D. Housing which is located in a multiple dwelling, the acquisition, construction, rehabilitation, repair or maintenance of which is, after July 1, 1955, financed in whole or in part by a loan, whether or not secured by a mortgage, the repayment of which is guaranteed or insured by the federal government or any agency thereof, or the state or any of its political subdivisions or any agency thereof, provided that such a housing accommodation shall be deemed to be publicly assisted only during the life of such loan and such guarantee or insurance; and

E. Housing which is offered for sale by a person who owns or otherwise controls the sale of 10 or more housing accommodations located on land that is contiguous (exclusive of public streets), if:

1. The acquisition, construction, rehabilitation, repair, or maintenance of such housing accommodations is, after July 1, 1955, financed in whole or in part by a loan, whether or not secured by a mortgage, the repayment of which is guaranteed or insured by the federal government or any agency thereof, or the state or any of its political subdivisions or any agency thereof, provided that such a housing accommodation shall be deemed to be publicly assisted only during the life of such loan and guarantee or insurance; or

2. A commitment, issued by a government agency after July 1, 1955, is outstanding, that acquisition of such housing accommodations may be

financed in whole or in part by a loan, whether or not secured by a mortgage, the repayment of which is guaranteed or insured by the federal government or any agency thereof, or the state or any of its political subdivisions or any agency thereof.

REAL ESTATE BROKER

Any person who, or firm which, for another and for a fee, commission, or other valuable consideration, lists for sale, sells, at auction or otherwise, exchanges, buys or rents, or offers or attempts to negotiate a sale, at auction or otherwise, exchange, purchase or rental of an estate or interest in real estate, or collects or offers to attempt to collect rent for the use of real estate, or negotiates or offers or attempts to negotiate a loan secured or to be secured by a mortgage or other encumbrance upon or transfer of real estate. In connection with the sale of lots pursuant to the provisions of Article 9-A of the New York Real Property Law, the term "real estate broker" shall also include any person or firm employed by or on behalf of the owner or owners of lots or other parcels of real estate, at a stated salary, or upon a commission, or upon a salary and commission, or otherwise, to sell such real estate, or any parts thereof, in lots or other parcels, and who or which shall sell or exchange, or offer or attempt or agree to negotiate the sale or exchange of, any such lot or parcel of real estate.

REAL ESTATE SALESPERSON

An individual employed by a licensed real estate broker to list for sale, sell or offer for sale, at auction or otherwise, to buy or to negotiate the purchase or sale or exchange of real estate, or to negotiate a loan on real estate, or to lease or rent or offer to lease, rent or place for rent any real estate, or who collects or offers or attempts to collect rent for the use of real estate for or on behalf of such real estate broker.

REASONABLE ACCOMMODATION

Actions taken which permit an employee, prospective employee or labor organization member (A) with a disability; or (B) with a pregnancy-related condition; to perform in a reasonable manner the essential functions involved in the job or occupation sought or held and include, but are not limited to, provision of an accessible worksite, acquisition or modification of equipment, support services for individuals with impaired hearing or vision, job restructuring and modified work schedules, or some form of protection or security measure: provided, however, that such actions do not impose an undue hardship on the business, program or enterprise of the entity from which action is requested.

SERVICE DOG

Any dog that is trained to work or perform specific tasks for the benefit of an individual with a disability by a recognized service dog training center or professional service dog trainer, and is actually used for such purpose.

SEXUAL ORIENTATION

Heterosexuality, homosexuality or bisexuality.

VICTIM OF DOMESTIC VIOLENCE

An individual who is a victim of an act which would constitute a family offense pursuant to subdivision 1 of §812 of the Family Court Act.

§528-7. Unlawful discriminatory practices in employment.

A. It shall be an unlawful discriminatory practice:

1. For an employer to refuse to hire or employ or to bar or to discharge from employment or to discriminate against any individual in promotion, compensation or in terms, conditions or privileges of employment because of such individual's group identity or status as a victim of domestic violence.

2. For an employment agency to discriminate against any individual, because of such individual's group identity or status as a victim of domestic violence, in receiving, classifying, disposing of or otherwise acting upon applications for its services or in referring an applicant or applicants for its services to an employer.

3. For a labor organization to exclude or to expel from its membership an individual or to discriminate in any way against any of its members or against any employer or any individual employed by an employer because of such individual's group identity or status as a victim of domestic violence.

4. For any employer, labor organization or employment agency to print or circulate or cause to be printed or circulated any statement, advertisement or publication, or to use any form of application for employment or to make any inquiry in connection with prospective employment which expresses, directly or indirectly, any limitation, specification or discrimination as to group identity or status as a victim of domestic violence, or any intent to make any such limitation, specification or discrimination, unless based upon a bona fide occupational qualification.

5. For any employer, labor organization, employment agency or any joint labor-management committee controlling apprentice training programs:

   a. To refuse to select any individual or individuals for an apprentice training program registered with the State of New York because of the individual's or individuals' group identity or status as a victim of domestic violence.

   b. To deny to or withhold from any individual or individuals, because of his or her group identity or status as a victim of domestic violence, the right to be admitted to or participate in a guidance program, an apprenticeship, training program, on-the-job training program, or other occupational training or retraining program.

   c. To discriminate against any individual in his or her pursuit of such programs or to discriminate against such an individual in the terms, conditions or privileges of such programs because of group identity or status as a victim of domestic violence.

   d. To print or circulate or cause to be printed or circulated any statement, advertisement or publication, or to use any form of application for such programs or to make any inquiry in connection with such programs which expresses, directly or indirectly, any limitation, specification or discrimination based on an individual's or applicant's group identity or status as a victim of domestic violence, or any intent to make any such limitation, specification or discrimination, unless based upon a bona fide occupational qualification.

6. For any employer, labor organization or employment agency to discharge, expel or otherwise discriminate against any individual because he or she has (a) opposed any practices forbidden under this Article; or (b) filed a complaint, testified, or assisted in any proceeding under this Article: or (c) commenced a civil action against such employer, labor organization or employment agency, or employee or agent thereof, which action alleges the commission of an unlawful discriminatory practice, or (d) participated with the Commission or its members or counsel in any investigation; or (e) provided information to the Commission or its members or counsel in any investigation.

7. For an employer to compel an employee who is pregnant to take a leave of absence, unless the employee is prevented by such pregnancy from performing the essential functions of the job or occupation in a reasonable manner and no reasonable accommodation can be made, without causing an undue hardship on the employer, which will permit the employee to perform the essential functions of the job or occupation in a reasonable manner.

8. For any employer to discriminate against an employee who chooses to express breast milk in the workplace, to refuse to provide reasonable unpaid break time or refuse to permit an employee to use paid break time or meal time each day to allow an employee to express breast milk for her nursing child for up to three (3) years following child birth, or refuse to make reasonable efforts to provide a room or other location, in close proximity to the work area, where an employee can express breast milk in privacy.

9. For an employer, employment agency or labor organization to refuse to provide reasonable accommodations to the known disabilities or pregnancy-related conditions of an employee, prospective employee or labor organization member in connection with a job or occupation sought or held or participation in a training program. Nothing contained in section 528-7(A)(9) shall be construed to require provision of accommodations which the employer, employment agency or labor organization can demonstrate will impose an undue hardship on the operation of an employer's, employment agency's, or labor organization's business, program or enterprise. Factors that may be considered by the Commission in determining whether the accommodation constitutes an undue hardship include, but are not limited to:

    i. the overall size of the business, program or enterprise with respect to the number of employees, number and types of facilities, and size of budget;

    ii. the type of operation which the business, program, or enterprise is engaged in, including the composition and structure of the workforce; and

    iii. the nature and cost of the accommodation needed.

10. For any employer, or an employee or agent thereof, to impose upon an individual as a condition of obtaining or retaining employment, including opportunities for promotion, advancement or transfers, any terms or conditions that would require such individual to violate or forego a sincerely held practice of his or her religion including, but not limited to, the observance of any particular day or days or any portion thereof as a Sabbath or other holy day in accordance with the requirements of his or her religion, unless, after engaging in a bona fide effort, the employer demonstrates that it is unable to reasonably accommodate the employee's or prospective employee's sincerely held religious

observance or practice without undue hardship on the conduct of the employer's business.

a. Notwithstanding any other provision of law to the contrary, an employee shall not be entitled to premium wages or premium benefits for work performed during hours to which such premium wages or premium benefits would ordinarily be applicable, if the employee is working during such hours only as an accommodation to his or her sincerely held religious requirements. Nothing in section 528-7(A)(10)(a) or section 528-7(A)(10)(b) shall alter or abridge the rights granted to an employee concerning the payment of wages or privileges of seniority accruing to that employee.

b. Except where it would cause an employer to incur an undue hardship, no individual shall be required to remain at his or her place of employment during any day or days or portion thereof that, as a requirement of his or her religion, he or she observes as his or her Sabbath or other holy day, including a reasonable time prior and subsequent thereto for travel between his or her place of employment and his or her home; provided, however, that any such absence from work shall, wherever practicable in the reasonable judgment of the employer, be made up by an equivalent amount of time and work at some other mutually convenient time, or shall be charged against any leave with pay ordinarily granted, other than sick leave; provided further, however, that any such absence not so made up or charged, may be treated by the employer of such individual as leave taken without pay.

c. It shall be an unlawful discriminatory practice for an employer or an employee or agent thereof to refuse to permit an employee to utilize leave, as provided in section 528-7(A)(10)(b), solely because the leave will be used for absence from work to accommodate the employee's sincerely held religious observance or practice.

d. As used in this section 528-7(A)(10):

"Undue hardship" means an accommodation requiring significant expense or difficulty (including a significant interference with the safe or efficient operation of the workplace or a violation of a bona fide seniority system). Factors that may be considered by the Commission in determining whether the accommodation constitutes an undue hardship include, but are not limited to:

(a) the identifiable cost of the accommodation, including the costs of loss of productivity and of retaining or hiring employees or transferring employees from one facility to another, in relation to the size and operating cost of the employer;

(b) the number of individuals who will need the particular accommodation to a sincerely held religious observance or practice;

(c) for an employer with multiple facilities, the degree to which the geographic separateness or administrative or fiscal relationship of the facilities will make the accommodation more difficult or expensive; and

(d) the resulting inability of an employee to perform the essential functions of the position in which he or she is employed.

11.a. For any fire department or fire company therein, through any member or members thereof, officers, board of fire commissioners or other body or office having power of appointment of volunteer firefighters, directly or indirectly, by ritualistic practice, constitutional or by-law prescription, by tacit agreement among its members, or otherwise, to deny to any individual membership in any volunteer fire department or fire company therein, or to expel or discriminate against any volunteer member of a fire department or fire company therein, because of the race, creed, color, national origin, sexual orientation, military status, gender or marital status of such individual.

b. Upon the filing of a complaint under this Article, and in the event of a finding that an unlawful discriminatory practice has been engaged in, the board of fire commissioners or other body or office having power of appointment of volunteer firefighters shall be served with any order required under this Article to be served on any or all respondents requiring such respondent or respondents to cease and desist from such unlawful discriminatory practice and to take affirmative action. Unless such board has been found to have engaged in an unlawful discriminatory practice, service upon such board of such order shall not constitute such board or its members as a respondent nor constitute a finding of an unlawful discriminatory practice against such board or its members.

12.a. For any person to deny any license or employment to any individual by reason of his or her having been convicted of one or more criminal offenses, or by reason of a finding of a lack of "good moral character" which is based upon his or her having been convicted of one or more criminal offenses, when such denial is in violation of the provisions of Article 23-A of the New York Correction Law. Further, there shall be a rebuttable presumption in favor of excluding from evidence the prior incarceration or conviction of any individual, in a case alleging that the employer has been negligent in hiring or retaining an applicant or employee, or supervising a hiring manager, if after learning about an applicant or employee's past criminal conviction history, such employer has evaluated the factors set forth in section seven hundred fifty-two of the correction law, and made a reasonable, good faith determination that such factors militate in favor of hire or retention of that applicant or employee.

b. Unless specifically required or permitted by statute, for any person to make any inquiry about, whether in any form of application or otherwise, or to act upon adversely to the individual involved, any arrest or criminal accusation of such individual not then pending against that individual which was followed by a termination of that criminal action or proceeding in favor of such individual, as defined in subdivision two of section 160.50 of the criminal procedure law, or by a youthful offender adjudication, as defined in subdivision one of section 720.35 of the criminal procedure law, or by a conviction for a violation sealed pursuant to section 160.55 of the criminal procedure law or by a conviction which is sealed pursuant to section 160.58 of the criminal procedure law, in connection with the licensing, employment or providing of credit or insurance to such individual; provided, further, that no person shall be required to divulge information pertaining to any arrest or criminal accusation of such individual not then pending against that individual which was followed by a termination of that criminal action or proceeding in favor of such individual, as defined in subdivision two of section 160.50 of the criminal procedure law, or by a youthful offender adjudication, as defined in subdivision one of section 720.35 of the criminal procedure law, or by a conviction for a violation sealed pursuant to section 160.55 of the criminal procedure law, or by a conviction which is

sealed pursuant to section 160.58 of the criminal procedure law. The provisions of this section 528-7(A)(12) shall not apply to the licensing activities of governmental bodies in relation to the regulation of guns, firearms and other deadly weapons or in relation to an application for employment as a police officer or peace officer as those terms are defined in subdivisions thirty-three and thirty-four of section 1.20 of the criminal procedure law; provided further that the provisions of this section 528-7(A)(12) shall not apply to an application for employment or membership in any law enforcement agency with respect to any arrest or criminal accusation which was followed by a youthful offender adjudication, as defined in subdivision one of section 720.35 of the criminal procedure law, or by a conviction for a violation sealed pursuant to section 160.55 of the criminal procedure law, or by a conviction which is sealed pursuant to section 160.58 of the criminal procedure law.

B. An employer shall be liable for an unlawful discriminatory practice based upon the conduct of an employee who, or agent which is in violation of any provision of section 528-7 where:

1. The employee or agent exercises or exercised managerial or supervisory responsibility; or
2. The employer knew of the employee's or agent's discriminatory conduct, and acquiesced in such conduct or failed to take immediate and appropriate corrective action. An employer shall be deemed to have knowledge of any employee's or agent's discriminatory conduct where that conduct was known by another employee or agent who exercised managerial or supervisory responsibility; or
3. The employer should have known of the employee's or agent's discriminatory conduct and failed to exercise reasonable diligence to prevent such discriminatory conduct.

§528-8. Unlawful discriminatory practices in places of public accommodation, resort or amusement.

A. It shall be an unlawful discriminatory practice for any person, being the owner, lessee, proprietor, manager, superintendent, agent or employee of any place of public accommodation, resort or amusement, because of the actual or perceived race, color, creed, national origin, alienage or citizenship status, gender, sexual orientation, disability, or marital status of any individual or the actual military status of any individual, directly or indirectly, to refuse, withhold from or deny to such individual any of the accommodations, advantages, facilities or privileges thereof, including the extension of credit, or, directly or indirectly, to publish, circulate, issue, display, post or mail any written or printed communication, notice or advertisement to the effect that any of the accommodations, advantages, facilities and privileges of any such place shall be refused, withheld from or denied to any individual on account of actual or perceived race, color, creed, national origin, alienage or citizenship status, gender, sexual orientation, disability, or marital status of any individual or the actual military status of any individual, or that the patronage or custom thereat of any individual of or purporting to be of any particular race, creed, color, national origin, alienage or citizenship status, gender, sexual orientation, disability, marital status or actual military status is unwelcome, objectionable, or not acceptable, desired or solicited.

B. Nothing in this section 528-8 shall be construed to prevent the barring of any individual, because of the sex of such individual, from places of public accommodations, resort or amusement, based on bona fide considerations of public policy; nor shall this section 528-8

apply to the rental of rooms in a housing accommodation which restricts such rental to individuals of one sex.

C. For the purposes of this section 528-8, "unlawful discriminatory practice" includes:

1. A refusal to make reasonable modifications in policies, practices, or procedures, when such modifications are necessary to afford facilities, privileges, advantages or accommodations to individuals with disabilities, unless such person can demonstrate that making such modifications would fundamentally alter the nature of such facilities, privileges, advantages or accommodations or would result in an undue burden;

2. A refusal to take such steps as may be necessary to ensure that no individual with a disability is excluded or denied services because of the absence of auxiliary aids and services, unless such person can demonstrate that taking such steps would fundamentally alter the nature of the facility, privilege, advantage or accommodation being offered or would result in an undue burden;

3. A refusal to remove architectural barriers, and communication barriers that are structural in nature, in existing facilities, and transportation barriers in existing vehicles and rail passenger cars used by an establishment for transporting individuals (not including barriers that can only be removed through the retrofitting of vehicles or rail passenger cars by the installation of a hydraulic or other lift), where such removal is readily achievable; and

4. Where such person can demonstrate that the removal of a barrier under section 528-8(C)(3) is not readily achievable, a failure to make such facilities, privileges, advantages or accommodations available through alternative methods if such methods are readily achievable.

D. For the purposes of section 528-8(C) above:

1. "Readily achievable" means easily accomplishable and able to be carried out without much difficulty or expense. Factors that may be considered by the Commission in determining whether an action is readily achievable include, but are not limited to:

   a. the nature and cost of the action needed under section 528-8(C);

   b. the overall financial resources of the facility or facilities involved in the action; the number of individuals employed at such facility; the effect on expenses and resources or the impact otherwise of such action upon the operation of the facility;

   c. the overall financial resources of the place of public accommodation, resort or amusement; the overall size of the business of such a place with respect to the number of its employees; the number, type and location of its facilities; and

   d. the type of operation or operations of the place of public accommodation, resort or amusement, including the composition, structure and functions of the workforce of such place; the geographic separateness, administrative or fiscal relationship of the facility or facilities in question to such place.

2. "Auxiliary aids and services" include:

a. qualified interpreters or other effective methods of making aurally delivered materials available to individuals with hearing impairments;

b. qualified readers, taped texts or other effective methods of making visually delivered materials available to individuals with visual impairments;

c. acquisition or modification of equipment or devices; and

d. other similar services and actions.

3. "Undue burden" means significant difficulty or expense. Factors that may be considered by the Commission in determining whether an action would result in an undue burden include, but are not limited to:

a. The nature and cost of the action needed under section 528-8(C);

b. The overall financial resources of the site or sites involved in the action; the number of individuals employed at the site; the effect on expenses and resources; legitimate safety requirements that are necessary for safe operation, including crime prevention measures; or the impact otherwise of the action upon the operation of the site;

c. The geographic separateness, and the administrative or fiscal relationship of the site or sites in question to any parent corporation or entity;

d. If applicable, the overall financial resources of any parent corporation or entity; the overall size of the parent corporation or entity with respect to the number of its employees; the number, type, and location of its facilities; and

e. If applicable, the type of operation or operations of any parent corporation or entity, including the composition, structure, and functions of the workforce of the parent corporation or entity.

E. Sections 528-8(C) and (D) shall not apply to any air carrier, the National Railroad Passenger Corporation, or public transportation facilities, vehicles or services owned, leased or operated by the state, a county, city, town or village, or any agency thereof, or by any public benefit corporation or authority.

§528-9. Unlawful discriminatory practices in the sale, lease or rental of housing accommodations or commercial property.

A. It shall be an unlawful discriminatory practice:

1. To refuse to sell, rent, lease or otherwise deny to or withhold from any individual or group of individuals any housing accommodation, constructed or to be constructed, land or commercial space, or an interest therein, or refuse to negotiate for the sale, rental or lease of any housing accommodation, land or commercial space, or an interest therein, to any individual or group of individuals, because of the group identity or lawful source of income of such individual or individuals or to represent that any housing

accommodation, land or commercial space, or an interest therein, is not available for inspection, sale, rental or lease when, in fact, it is so available, or to otherwise deny to or withhold any housing accommodation, land or commercial space, or an interest therein, or any facilities of any housing accommodation or commercial space from any individual or individuals because of the group identity or lawful source of income of such individual or individuals;

2. To discriminate against any individual or group of individuals because of the group identity or lawful source of income of such individual or individuals in the terms, conditions or privileges of the sale, rental, or lease of any housing accommodation, land or commercial space, or an interest therein, or in the furnishing of facilities or services in connection therewith;

3. To discriminate against any individual or group of individuals in making available a residential real estate transaction, or in the terms and conditions of such a transaction, because of the group identity or lawful source of income of such individual or individuals;

4. To refuse to permit, at the expense of the individual with a disability, reasonable modifications of existing premises occupied or to be occupied by the said individual, if the modifications may be necessary to afford the individual full enjoyment of the premises, in conformity with the provisions of the New York State Uniform Fire Prevention and Building Code, except that, in the case of a rental, the landlord may, where it is reasonable to do so, condition permission for a modification on the renter agreeing to restore the premises to the condition that existed before the modification, reasonable wear and tear excepted;

5. To refuse to make reasonable accommodations in rules, policies, practices, or services, when such accommodations may be necessary to afford an individual with a disability equal opportunity to use and enjoy a housing accommodation, including reasonable modifications to the common use portions of the housing accommodation;

6. In connection with the design and construction of covered multiple dwellings for first occupancy after January 1, 2007, to fail to design and construct those dwellings in such a manner that:

   a. The public use and common use portions of such dwellings are readily accessible to and usable by handicapped individual;

   b. All the doors designed to allow passage into and within all premises within such dwellings are sufficiently wide to allow passage by handicapped individuals in wheelchairs; and

   c. All premises within such dwellings contain the following features of adaptive design:

      i. An accessible route into and through the dwelling;

      ii. Light switches, electrical outlets, thermostats, and other environmental controls in accessible locations;

      iii. Reinforcements in bathroom walls to allow later installation of grab bars; and

      iv. Usable kitchens and bathrooms such that an individual in a wheelchair can maneuver about the space.

Compliance with the appropriate requirements of the American National Standard Institute for buildings and facilities providing accessibility and usability for physically handicapped people (commonly cited as "ANSI A117.1") suffices to satisfy the requirements of section 528-9(A)(6)(c);

7. To make, print, or publish, or cause to be made, printed or published any statement, advertisement, or publications, or to use any form of application for the purchase, rental, or lease of any housing accommodation, land or commercial space, or an interest therein, or to make any record or inquiry in connection with the prospective purchase, rental, or lease of such housing accommodation, land or commercial space, or an interest therein, which expresses, directly or indirectly, any limitation, specification, or discrimination with respect to group identity or because of the lawful source of income of such individual or individuals, or any intent to make any such limitation, specification, or discrimination;

8. To induce or attempt to induce, for profit or otherwise, any person to sell, rent or lease any housing accommodation, land, or commercial space, or an interest therein, by representations, explicit or implicit, regarding the entry or prospective entry into the neighborhood of an individual or group of individuals because of his, her or their group identity or lawful source of income;

9. To threaten, intimidate, or interfere with individuals in their enjoyment of a housing accommodation, land or commercial space because of their group identity or lawful source of income, or the group identity of their guests, invitees, visitors or associates.

B. It shall be an unlawful discriminatory practice for any real estate broker, real estate salesperson, or an employee or agent of a real estate broker or real estate salesperson:

1. To refuse to sell, rent or lease any housing accommodation, land or commercial space, or an interest therein, to any individual or group of individuals or to refuse to negotiate for the sale, rental or lease of any housing accommodation, land or commercial space, or an interest therein, to any individual or group of individuals because of the group identity or because of the lawful source of income of such individual or group of individuals, or to represent that any housing accommodation, land or commercial space, or an interest therein, is not available for inspection, sale, rental or lease when, in fact, it is so available, or otherwise deny or withhold any housing accommodation, land or commercial space, or an interest therein, or any facilities of any such housing accommodation or commercial space from any individual or group of individuals because of the group identity or because of the lawful source of income of such individual or individuals.

2. To print or circulate or cause to be printed or circulated any statement, advertisement or publication, or to use any form of application for the purchase, sale, rental or lease of any housing accommodation, land, or commercial space, or an interest therein, or to make any record or inquiry in connection with the prospective purchase, sale, rental or lease of any housing accommodation, land or commercial space, or an interest therein, which expresses, directly or indirectly, any limitation, specification, or discrimination as to group identity or as to lawful source of income, or any intent to make any such limitation, specification or discrimination.

C. Exceptions.

1. The provisions of section 528-9, as they relate to age, shall not apply to individuals under the age of eighteen years.

2. The provisions of section 528-9(A)(1) through (7) shall not apply: a) to the rental of housing accommodations in a building which contains housing accommodations for not more than two (2) families if the owner or members of his or her family reside in one of such housing accommodations; or b) to the rental of a room or rooms in a housing accommodation if such rental is by the occupant of the housing accommodation or by the owner of the housing accommodation and he or she or members of his or her family reside in such housing accommodation; or c) solely with respect to age and familial status, to the restriction of the sale, rental or lease of housing accommodations exclusively to individuals 62 years of age or older and the spouse of any such individual, or for housing intended and operated for occupancy by at least one individual 55 years of age or older per unit. In determining whether housing is intended and operated for occupancy by individuals 55 years of age or older, Section 807(b)(2)(C) [42 U.S.C. §3607(b)(2)(c)] of the federal Fair Housing Act of 1988, as amended, shall apply.

3. The provisions of section 528-9, as they relate to unlawful discriminatory practices on the basis of lawful source of income, shall not apply to housing accommodations that contain two (2) or fewer housing units; provided, however, the provisions of section 528-9 shall apply to all housing accommodations, regardless of the number of units contained in each, of any person who has the rights to sell, rent or lease or approve the sale, rental or lease of at least three (3) housing accommodations within Suffolk County, constructed or to be constructed, or has the rights to sell, rent or lease or approve the sale, rental or lease of interests in at least three (3) housing accommodations.

4. Nothing in section 528-9(A)(4), (5) and (6) requires that a housing accommodation or multiple dwelling be made available to an individual whose tenancy would constitute a direct threat to the health or safety of other individuals or whose tenancy would result in substantial physical damage to the property of others.

§528-10. Unlawful discriminatory practices in relation to credit.

A. It shall be an unlawful discriminatory practice for any creditor or any officer, agent or employee thereof:

1. In the case of applications for credit with respect to the purchase, acquisition, construction, rehabilitation, repair or maintenance of any housing accommodation, land or commercial space, to discriminate against such applicant because of the group identity of such applicant or applicants, or any member, stockholder, director, officer, or employee of such applicant or applicants, or of the prospective occupants or tenants of such housing accommodation, land or commercial space, in the granting, withholding, extending, renewing, or in the fixing of the rates, terms or conditions of any such financial assistance or credit; or

2. To use any form of application for credit or make any record or inquiry in connection with applications for financial assistance or credit which expresses, directly or indirectly, limitations, specifications, preferences, or discrimination because of the group identity of the applicant or the applicants; or

3. To discriminate in the granting, withholding, extending or renewing, or in the fixing of the rates, terms or conditions of any form of credit, on the basis an applicant or applicants' group identity; or

4. To refuse to consider sources of an applicant's income or to subject an applicant's income to discounting, in whole or in part, because of an applicant's group identity.

B. Without limiting the generality of section 528-10(A), it shall be considered discriminatory if, because of an applicant's group identity:

1. An applicant or class of applicants is denied credit in circumstances where other applicants of like overall creditworthiness are granted credit; or

2. Special requirements or conditions, such as requiring co-obligors or reapplication upon marriage, are imposed upon an applicant or class of applicants in circumstances where similar requirements or conditions are not imposed upon other applicants of like overall creditworthiness.

C. Notwithstanding any provision of this section 528-10 to the contrary, it shall not be:

1. Considered an unlawful discriminatory practice if credit differentiations or decisions are based upon factually supportable, objective differences in applicants' overall credit worthiness, which may include reference to such factors as current income, assets and prior credit history of such applicants, as well as reference to any other relevant factually supportable data; provided, however, that no creditor shall consider, in evaluating the credit worthiness of an applicant, aggregate statistics or assumptions relating to group identity or the applicant's lawful source of income.

2. Considered an unlawful discriminatory practice to consider age in determining creditworthiness when age has a demonstrable and statistically sound relationship to a determination of creditworthiness.

§528-11. Unlawful discriminatory practices relating to domestic workers.

A. It shall be an unlawful discriminatory practice for an employer or any employee or agent thereof to:

1. Engage in unwelcome sexual advances, requests for sexual favors, or other verbal or physical conduct of a sexual nature to a domestic worker when: (a) submission to such conduct is made either explicitly or implicitly a term or condition of an individual's employment; (b) submission to or rejection of such conduct by an individual is used as the basis for employment decisions affecting such individual; or (c) such conduct has the purpose or effect of unreasonably interfering with an individual's work performance by creating an intimidating, hostile, or offensive working environment; or

2. Subject a domestic worker to unwelcome harassment based on the individual's gender, race, creed or national origin, where such harassment has the purpose or effect of unreasonably interfering with an individual's work performance by creating an intimidating, hostile, or offensive working environment.

§528-12. General provisions defining unlawful discriminatory practices.

A. It shall be an unlawful discriminatory practice for any person to aid, abet, incite, compel or coerce the doing of any of the acts forbidden under this Article.

B. It shall be an unlawful discriminatory practice for any person engaged in any activity to which this Article applies to retaliate or discriminate against any individual because he or she has opposed any practice forbidden under this Article or because he or she has filed a complaint, testified or assisted in any proceeding under the Article.

C. It shall be an unlawful discriminatory practice for any person engaged in any activity covered by this Article to discriminate against a blind individual, a hearing impaired individual or an individual with a disability on the basis of his or her use of a guide dog, hearing dog or service dog.

D. It shall be an unlawful discriminatory practice to coerce, intimidate, threaten, or interfere with any individual in the exercise or enjoyment of, or on account of his or her having exercised or enjoyed, any right granted or protected by this Article; or on account of his or her having aided or encouraged any other individual in the exercise or enjoyment of any right granted or protected by this Article; or because of the group identity or status as a victim of domestic violence of an individual with whom such individual has or is perceived to have a relationship or association.

E. It shall be an unlawful discriminatory practice for any party to a conciliation agreement entered into pursuant to section 528-13 to violate the terms of such agreement.

F. Nothing contained in this Article shall be construed to bar any religious or denominational institution or organization, or any organization operated for charitable or educational purposes, which is operated, supervised or controlled by or in connection with a religious organization, from limiting participation in any activity, including, but not limited to, employment, education, sales, lease, or rental of housing accommodations, land or commercial space, or granting admission to, or giving preference to individuals of the same religion or denomination or taking such action as is calculated by such organization to promote the religious principles for which it is established or maintained.

§528-13. Jurisdiction and Procedures.

A. The Commission shall have jurisdiction to entertain a complaint where:

1. Any complainant or individual aggrieved by an unlawful discriminatory practice, by himself or herself or by such individual's attorney, makes, signs and files with the Commission a timely, verified complaint, in writing, which shall: a) state the name of the person alleged to have committed the unlawful discriminatory practice complained of, and the address of such person, if known; b) set forth the particulars of the alleged unlawful discriminatory practice; and c) contain such other information as may be required by the Commission. The Commission shall acknowledge the filing of the verified complaint and advise the complainant of the time limits and choice of forums set forth in this Article; and

2. The Commission itself makes, signs and files a verified complaint alleging that a person has committed an unlawful discriminatory practice.

B. The Commission shall serve a copy of the verified complaint upon the respondent and all persons it deems to be necessary parties and shall advise the respondent of his, her or its procedural rights and obligations as set forth herein. Any verified complaint filed pursuant to this Article may be amended pursuant to procedures prescribed by rules of the Commission by filing such amended verified complaint with the Commission and serving a copy thereof upon all parties to the proceeding.

C. The Commission shall not have jurisdiction to entertain a complaint if:

1. The complainant has previously initiated a civil action in a court of competent jurisdiction alleging an unlawful discriminatory practice as defined by this Article with respect to the same grievance which is the subject of the complaint under this Article, unless such civil action has been dismissed without prejudice or has been withdrawn without prejudice; or

2. The complaint has been filed more than one year after the alleged unlawful discriminatory practice occurred.

D. The Commission shall not entertain jurisdiction over a complaint filed against any Suffolk County governmental agency, department or body.

E. Answer.

1. Within ten (10) days after a copy of the verified complaint is served upon the respondent by the Commission, the respondent shall file a written, verified answer thereto with the Commission, and the Commission shall cause a copy of such answer to be served upon the complainant and any necessary party.

2. The respondent shall specifically admit, deny, or explain each of the facts alleged in the complaint, unless the respondent is without knowledge or information sufficient to form a belief, in which case the respondent shall so state, and such statement shall operate as a denial.

3. Any allegation in the complaint not specifically denied or explained shall be deemed admitted and shall be so found by the Commission unless good cause to the contrary is shown.

4. All affirmative defenses shall be stated separately in the answer.

5. Upon request of the respondent and for good cause shown, the period within which an answer is required to be filed may be extended in accordance with the rules of the Commission.

6. Any necessary party may file with the Commission a written, verified answer to the complaint, and the Commission shall cause a copy of such answer to be served upon the complainant, respondent and any other necessary party.

7. Any answer filed pursuant to this section may be amended pursuant to procedures prescribed by rule of the Commission by filing such amended answer with the Commission and serving a copy thereof upon the complainant and any necessary party to the proceeding.

F. Withdrawal of complaint.

1. A complaint filed pursuant to section 528-13(A)(1) may be withdrawn by the complainant as of right at any time prior to a determination of the issue of probable cause. Such a withdrawal shall be in writing and signed by the complainant.

2. Unless such complaint is withdrawn pursuant to a conciliation agreement, the withdrawal of a complaint shall be without prejudice:

   a. To the continued investigation of the complaint by the Commission in accordance with rules of the Commission;

   b. To the initiation of a complaint by the Commission based in whole or in part upon the same facts;

   c. To the commencement of a civil action by the complainant in a court of competent jurisdiction; or

   d. To the commencement of a civil action in a court of competent jurisdiction by the County Attorney.

G. Dismissal of complaint.

1. The Commission may, in its discretion, dismiss a complaint for administrative convenience at any time prior to the taking of testimony at a hearing. Administrative convenience shall include, but not be limited to, the following circumstances:

   a. Commission personnel have been unable to locate the complainant after diligent efforts to do so;

   b. The complainant has repeatedly failed to appear at mutually agreed upon appointments with Commission personnel or is unable or unwilling to meet with Commission personnel, to provide requested documentation, or to attend a hearing;

   c. Relief is precluded by the respondent's absence or other special circumstances;

   d. The complainant's objections to a proposed conciliation agreement are without substance;

   e. Holding a hearing will not benefit the complainant;

   f. The complainant has repeatedly engaged in conduct which is disruptive to the orderly functioning of the Commission;

   g. Prosecution of the complaint will not serve the public interest;

   h. The complainant has filed and has an action or proceeding pending before any administrative agency under any other law of the state alleging an unlawful discriminatory practice as defined by this Article with respect to the same grievance which is the subject of the complaint under this Article; or

   i. The complainant has filed a complaint with the New York State Division of Human Rights alleging an unlawful discriminatory practice as defined by this Article with

respect to the same grievance which is the subject of the complaint under this Article and a final determination has been made thereon.

2. The Commission shall dismiss a complaint for administrative convenience where a complainant requests that it do so for the purpose of commencement by the complainant of a civil action in a court of competent jurisdiction.

3. In accordance with the rules of the Commission, the Commission shall dismiss a complaint if the complaint is not within the jurisdiction of the Commission.

4. If, after investigation, the Commission determines that probable cause does not exist to believe that the respondent has engaged or is engaging in an unlawful discriminatory practice, the Commission shall dismiss the complaint as to such respondent.

5. The Commission shall promptly serve notice of any dismissal pursuant to this section upon the complainant, respondent and any necessary party.

6. The complainant may, within thirty (30) days of service of a notice of dismissal, and in accordance with the rules of the Commission, apply to the Executive Director of the Commission for review of any dismissal pursuant to this section. Upon such application, the Executive Director shall review such action and issue an order affirming, reversing or modifying such determination or remanding the matter for further investigation and action. A copy of such order shall be served upon the complainant, respondent and any necessary party.

H. Mediation and Conciliation.

1. If, in the judgment of the Commission, circumstances so warrant, the Commission shall, to the extent feasible, endeavor to resolve the complaint by any method of dispute resolution prescribed by rule of the Commission, including, but not limited to, mediation and conciliation.

2. Mediators shall be selected by the Executive Director of the Commission and may include Commission staff.

3. The terms of any conciliation agreement will contain such provisions as may be agreed upon by the Commission, the complainant and the respondent.

4. The members of the Commission and its staff shall not publicly disclose what transpired in the course of mediation and conciliation efforts.

5. If a conciliation agreement is entered into, the Commission shall embody such agreement in an order and serve a copy of such order upon all parties to the conciliation agreement. Every conciliation agreement is subject to public disclosure except where the Commission determines, either on its own or pursuant to a request of a party(ies), that disclosure is not necessary to further the purposes of this Article.

I. Investigation.

1. Every complaint shall be investigated in a timely, comprehensive and thorough manner, according to standards and procedures to be adopted in the rules of procedure of the Commission.

2. Notwithstanding anything contained in section 119(G) of the Suffolk County Code to the contrary, the Commission may at any time issue subpoenas requiring attendance and giving of testimony by witnesses and the production of books, papers, documents and other evidence relating to any matter under investigation or any question before the Commission. The issuance of subpoenas shall be governed by the civil practice law and rules.

3. At the end of each investigation, the Commission shall prepare a final investigative report. The Commission shall make available, on the request of a complainant or respondent, a copy of the final investigative report.

J. Determination of Probable Cause.

1. Except in connection with Commission-initiated complaints, which shall not require a determination of probable cause, where the Commission determines that probable cause exists to believe that the respondent has engaged or is engaging in an unlawful discriminatory practice, the Commission shall issue a written notice to the complainant and respondent so stating. A determination of probable cause is not a final order of the Commission and shall not be administratively or judicially reviewable.

2. If a determination is made pursuant to section 528-13(J)(1) that probable cause exists, or if a Commission-initiated complaint has been filed, the Executive Director of the Commission shall refer the complaint to an administrative law judge unless the matter would be more appropriately handled by the New York State Division of Human Rights and would further this Article.

3. If a Commission-initiated complaint has been filed, the Executive Director of the Commission shall serve a notice upon the complainant, the respondent and any necessary party that the complaint has been so filed.

4. Nothing in section 528-13 shall be interpreted to prevent the receiving or other processing of complaints in accordance with any cooperative agreement with any federal or state agency concerned with the enforcement of laws against discrimination.

K. Hearing.

1. A hearing on the complaint shall be held before an administrative law judge, who shall be any attorney in good standing designated by the Commission.

2. The place of any such hearing shall be the office of the Commission or such other place as may be designated by the Commission. Notice of the date, time and place of such hearing shall be served upon the complainant, respondent and any necessary party.

3. The case in support of the complaint shall be presented before an administrative law judge. The complainant may present additional testimony and cross-examine witnesses, in person or by counsel. With respect to Commission-initiated complaints, the complainant may present additional testimony and cross-examine witnesses, in person or by counsel, if the complainant shall have intervened pursuant to rules established by the Commission.

4. The administrative law judge may, in his or her discretion, permit any person who has a substantial interest in the complaint to intervene as a party and may require the joinder of necessary parties.

5. Evidence relating to endeavors at mediation or conciliation by, between or among the Commission, the complainant and the respondent shall not be admissible at the hearing.

6. If the respondent has failed to answer the complaint within the time period prescribed in section 528-13(E) above, the administrative law judge shall enter a default and the hearing shall proceed to determine the evidence in support of the complaint; provided, however, that, upon application, the administrative law judge may, for good cause shown, open a default in answering, upon equitable terms and conditions, including the taking of an oral answer.

7. A respondent who has filed an answer or whose default in answering has been set aside by the Commission for good cause shown, or a necessary party, or a complainant or other person who has intervened pursuant to the rules of the Commission, may appear at such hearing, in person or otherwise, with or without counsel, and cross-examine witnesses, present testimony and offer evidence.

8. The hearing shall be governed by the rules of evidence applicable in the Supreme Court of the State of New York. The testimony taken at the hearing shall be under oath and shall be transcribed.

9. Subsequent to the hearing and to such briefing as the presiding administrative law judge may direct, the presiding administrative law judge shall prepare a recommended decision and order and forward that recommended decision and order, along with the record in the case, to the Executive Director.

L. Decision and Order.

1. If, upon all the evidence at the hearing, and upon the findings of fact, conclusions of law and relief recommended by an administrative law judge, the Executive Director shall find that a respondent has engaged in any unlawful discriminatory practice as set forth in this Article, the Executive Director shall state his/her findings of fact and conclusions of law and shall issue and cause to be served on such respondent an order for such relief as may be appropriate. Such order shall require the respondent to take such affirmative action as, in the judgment of the Executive Director, will effectuate the purposes of this Article and shall include, but not be limited to:

   a. cease and desist from the unlawful discriminatory practice;

   b. hiring, reinstatement or upgrading of employees, with or without back pay, restoration to membership in any respondent labor organization, admission to or participation in a guidance program, apprenticeship training program, on the job training program or other occupational training or retraining program;

   c. selling, renting or leasing, or approving the sale, rental or lease of housing accommodations, land, or commercial space, or an interest therein, or the provision of credit with respect thereto, without unlawful discrimination, if such actions are appropriate;

   d. requiring training, monitoring, or adopting alternative policies;

   e. payment of compensatory damages to the individual aggrieved by such practice or act; or

f. submission of reports with respect to the manner of compliance.

The Commission may also direct the payment of civil fines and penalties and attorney's fees to the County in the amounts and under circumstances described below in sections 528-14 and 528-15.

2. If, upon all the evidence at the hearing, and upon the findings of fact and conclusions of law recommended by the administrative law judge, the Executive Director shall find that a respondent has not engaged in any such unlawful discriminatory practice, the Executive Director shall state his/her findings of fact and conclusions of law and shall issue and cause to be served on the complainant, respondent, and any necessary party or any complainant who has not intervened an order dismissing the complaint as to such respondent.

M. Reopening of Proceeding by Commission.

The Commission may reopen any proceeding, or vacate or modify any order or determination of the Commission, whenever justice so requires, in accordance with the rules of the Commission.

N. Injunction and Temporary Restraining Order.

At any time after the filing of a complaint with the Commission alleging an unlawful discriminatory practice where there is reason to believe that the respondent, or any other person acting in concert with the respondent, may do or cause to be done any act that would tend to render ineffectual relief that could be ordered:

1. The County may commence or cause to be commenced, a special proceeding in accordance with article sixty-three of the civil practice law and rules for an order to show cause why the respondent and such other persons should not be enjoined from doing or causing such acts to be done; and

2. In the case of unlawful discriminatory practices in relation to the sale, lease, or rental of housing accommodations or commercial property, where the County has obtained injunctive relief pursuant to this section, a notice may be posted by the County in a conspicuous place on such housing accommodation or commercial property stating that such accommodation or property is the subject of a complaint before the Commission and that prospective buyers, renters, or lessees will take such accommodations or property at their own risk; provided, however, that no such notice shall be posted where the person charged with discrimination agrees in writing not to sell, rent, or lease such housing accommodations or property during the pendency of the action or proceeding against him, her, or it. Any willful destruction, defacement, alteration or removal of such notice by the owner or the agents or employees of the owner shall be a misdemeanor punishable upon conviction by a fine of up to $500.

3. Nothing herein shall prevent a complainant from applying to a court of competent jurisdiction for an injunction, temporary or permanent, or from filing a lis pendens against property.

O. Judicial Review.

1. Any complainant, respondent or other person aggrieved by a final order of the Executive Director of the Commission issued pursuant to sections 528-13(G) and 528-13(L) above, may obtain judicial review thereof in a proceeding as provided in this section 528-13(O).

2. Such proceeding shall be brought in Supreme Court, Suffolk County;

3. Such proceeding shall be initiated by the filing of a petition in such court and the issuance and service of a notice of petition returnable before such court. Thereupon, the court shall have jurisdiction of the proceeding and of the questions determined therein, and shall have power to make and enter upon the pleadings, testimony, and proceedings set forth in any written transcript of the record upon the hearing before the Commission an order annulling, confirming or modifying the order of the Commission, in whole or in part, or to grant to the petitioner, or any other party, such temporary relief, restraining order, or other order or relief as the court determines is just and proper.

4. A proceeding under this section 528-13(O) must be instituted within sixty (60) days after the service of the final order of the Commission.

P. Enforcement.

1. Any action or proceeding that may be appropriate or necessary for the enforcement of any order issued by the Commission pursuant to this Article, including actions to secure permanent injunctions enjoining any acts or practices which constitute a violation of any such order, mandating compliance with the provisions of any such order, imposing penalties, or for such other relief as may be appropriate, may be initiated in any court of competent jurisdiction by the County on behalf of the Commission. In any such action or proceeding, application may be made for a temporary restraining order or preliminary injunction, enforcing and restraining all persons from violating any provisions of any such order, or for such other relief as may be just and proper, until hearing and determination of such action or proceeding and the entry of final judgment or order thereon. The court to which such application is made may make any or all of the orders specified, as may be required in such application, with or without notice, and may make such other or further orders or directions as may be necessary to render the same effect.

2. In any action or proceeding brought pursuant to section 528-13(P)(1), no person shall be entitled to contest the terms of the order sought to be enforced unless that person has timely commenced a proceeding for review of the order pursuant to section 528-13(O).

3. An action or proceeding may be commenced in any court of competent jurisdiction on behalf of the Commission for the recovery of the civil and criminal penalties provided for in this Article.

Q. Institution of Actions or Proceedings.

Where any of the provisions of this Article authorize an application to be made, or an action or proceeding to be commenced on behalf of the Commission in a court, such application may be made or such action or proceeding may be instituted only by the County Attorney, such attorneys that may be employed by the Commission as are designated by the County Attorney or other individuals designated by the County Attorney.

R. Civil Cause of Action.

1. Any individual, including an individual who has filed a complaint with the Commission, claiming to be aggrieved by an unlawful discriminatory practice as proscribed by this Article shall have a cause of action in any court of competent jurisdiction for damages, injunctive relief and such other remedies as may be appropriate; provided, however, that an individual who has filed a complaint with the Commission with respect to such alleged unlawful discriminatory practice withdraws the complaint so filed.

2. Notwithstanding any inconsistent provision of section 528-13(R), where a complaint filed with the Commission is dismissed pursuant to section 528-13(G) for administrative convenience, an individual shall maintain all rights to commence a civil action pursuant to this Article as if no such complaint has been filed.

3. A civil action commenced under this section 528-13(R) must be commenced within two (2) years after the alleged unlawful discriminatory practice occurred. Upon the filing of a complaint with the Commission and during the pendency of such complaint and any court proceeding for review of the dismissal of such complaint, such two-year limitation period shall be tolled.

4. Notwithstanding any inconsistent provision of this section 528-13(R), where a complaint filed with the Commission is dismissed for administrative convenience and such dismissal is due to the complainant's malfeasance, misfeasance or recalcitrance, the two-year limitation period on commencing a civil action pursuant to this section shall not be tolled.

5. Reasonable attorney's fees and costs may be awarded to a prevailing party in a civil action commenced pursuant to this section 528-13(R) in accordance with applicable provisions of state law.

S. Pattern and practice investigations by County Attorney.

1. Whenever there is reasonable cause to believe that a person is engaged in a pattern or practice that results in the denial to any individual of the full enjoyment of any right secured by this Article, a civil action on behalf of the Commission or the County may be commenced in a court of competent jurisdiction by filing a complaint setting forth facts pertaining to such pattern or practice and requesting such relief as may be deemed necessary to insure the full enjoyment of the rights described in this Article, including, but not limited to, injunctive relief, damages, and such other types of relief as are deemed appropriate. Nothing in this section 528-13(S) shall be construed to prohibit an individual from filing a complaint pursuant to section 528-13(A) or from commencing a civil action in a court of competent jurisdiction based upon the same facts pertaining to such pattern or practice as are alleged in the civil action, or the Commission from filing a Commission-initiated complaint pursuant to section 528-13(A) alleging a pattern or practice of discrimination, provided that a civil action pursuant to this subsection shall not have previously been commenced.

2. A civil action commenced under this section 528-13(S) must be commenced within two (2) years after the alleged discriminatory practice occurred.

3. Such action may be instituted only by the County Attorney, such attorneys employed by the Commission as are designated by the County Attorney or other individuals designated by the County Attorney.

§ 528-14. Damages and civil fines and penalties.

A. In any matter where the Executive Director finds that a person has engaged in an unlawful discriminatory practice, the Commission may award compensatory damages to the individual aggrieved by such practice; impose payment to the County general fund of profits obtained by a respondent through the commission of unlawful discriminatory acts; and impose civil fines and penalties in an amount not to exceed $50,000, to be paid to the County general fund by a respondent, or not to exceed $100,000 to be paid to the County general fund by a respondent found to have committed an unlawful discriminatory act which is found to be willful, wanton or malicious. In cases of housing discrimination only, punitive damages in an amount not to exceed $10,000 may be awarded to the individual aggrieved by such practice.

B. Any civil fines or penalties imposed pursuant to this section 528-14, shall be separately stated and shall be in addition to and not reduce or offset any other damages or payment imposed upon a respondent pursuant to this Article. In cases of employment discrimination where the employer has fewer than fifty (50) employees, such civil fine or penalty may be paid in reasonable installments, in accordance with regulations promulgated by the Commission. Such regulation shall require the payment of reasonable interest resulting from the delay and in no case permit installments to be made over a period longer than three (3) years.

C. In addition to any other penalties or sanctions which may be imposed pursuant to any other law, any person who knowingly makes a material false statement in any proceeding conducted, or document or record filed, with the Commission, or record required to be preserved or made and kept and subject to inspection by the Commission pursuant to this section shall be liable for a civil penalty in an amount up to $5,000.

D. In addition to any other penalties or sanctions which may be imposed pursuant to this Article or any other law, any person who shall willfully resist, prevent, impede or interfere with the Commission or any of its employees or representatives in the performance of duty under this Article, or who shall willfully violate an order of the Commission or Executive Director or conciliation agreement, shall be liable for a civil penalty of not more than $50,000 and an additional civil penalty of not more than $1,000 per day for each day that the violation continues.

§528-15. Attorney's fees.

Attorney's fees may be awarded by the Commission to a prevailing party under this Article in accordance with applicable provisions of state law.

§528-16. Enforcement.

A. Any action or proceeding that may be appropriate or necessary for the enforcement of any order issued by the Commission pursuant to this Article, shall be brought in the New York State Supreme Court, Suffolk County.

B. The County Attorney is hereby authorized to take such action as necessary to obtain enforcement of the provisions of this Article, including the enforcement of corrective orders and the assessment of penalties and fines as provided herein. Any action taken

by the Commission or the County Attorney under this Article shall not require resolution of the County Legislature.

§528-17. Construction.

This Article shall be construed liberally for the accomplishment of its purposes.

§528-18. Rules and regulations.

The Executive Director of the Suffolk County Human Rights Commission is hereby authorized, empowered, and directed to promulgate and issue such rules and regulations as shall be deemed necessary to carry out the provisions of this law. These rules shall include rules providing that the Commission shall be a party to all complaints and that a complainant shall be a party to a Commission-initiated complaint if the complainant has intervened in the manner set forth in the rules of the Commission. These rules shall also include rules governing discovery, sanctions for noncompliance with orders, motion practice and the issuance of subpoenas.

Section 3. Applicability.

This law shall apply to all complaints filed with the Commission or by the Commission on or after the effective date of this law.

Section 4. SEQRA Determination.

This Legislature, being the State Environment Quality Review Act (SEQRA) lead agency, hereby finds and determines that this law constitutes a Type II action pursuant to Section 617.5(c)(20) and/or (27) of Title 6 of the NEW YORK CODE OF RULES AND REGULATIONS (6 NYCRR) and within the meaning of Section 8-0109(2) of the NEW YORK ENVIRONMENTAL CONSERVATION LAW as a promulgation of regulations, rules, policies, procedures, and legislative decisions in connection with continuing agency administration, management and information collection. The Suffolk County Council on Environmental Quality (CEQ) is hereby directed to circulate any appropriate SEQRA notices of determination of nonapplicability or non-significance in accordance with this law.

Section 5. Severability.

If any clause, sentence, paragraph, subdivision, section, or part of this law or the application thereof to any person, individual, corporation, firm, partnership, entity, or circumstance shall be adjudged by any court of competent jurisdiction to be invalid or unconstitutional, such order or judgment shall not affect, impair, or invalidate the remainder thereof, but shall be confined in its operation to the clause, sentence, paragraph, subdivision, section, or part of this law, or in its application to the person, individual, corporation, firm, partnership, entity, or circumstance directly involved in the controversy in which such order or judgment shall be rendered.

Section 6. Effective Date.

This law shall take effect on the ninetieth (90th) day immediately subsequent to filing in the Office of the Secretary of State.

DATED:

APPROVED BY:

_____

County Executive of Suffolk County

Date:

OFFICE OF THE COUNTY LEGISLATURE

COUNTY OF SUFFOLK

GEORGE NOLAN
COUNSEL TO THE LEGISLATURE
email: george.nolan@suffolkcountyny.gov

WILLIAM H. ROGERS BUILDING
P.O. BOX 6100
HAUPPAUGE, NY 11788-0099
(631) 853-5494 (PHONE)
(631) 853-4415 (FAX)

DATE: June 9, 2014

TO: CLERK OF THE COUNTY LEGISLATURE

RE: MEMORANDUM OF COUNSEL TO THE LEGISLATURE PURSUANT TO RULE 28

PROPOSED LOCAL LAW YEAR 2014

TITLE: I.R. NO. -2014; A LOCAL LAW TO AMEND, UPDATE AND REORGANIZE CHAPTER 528 OF THE SUFFOLK COUNTY CODE TO INCORPORATE CHANGES ADOPTED BY THE STATE AND TO FACILITATE CONTINUING ADVANCEMENTS AND MODIFICATIONS IN THE FUTURE

SPONSOR: PRESIDING OFFICER ON REQUEST OF THE COUNTY EXECUTIVE

DATE OF RECEIPT BY COUNSEL: 6/9/14 **PUBLIC HEARING:** 7/29/14

DATE ADOPTED/NOT ADOPTED: _____ **CERTIFIED COPY RECEIVED:** _____

Chapter 528 of the SUFFOLK COUNTY CODE addresses acts of bias and discrimination that are impermissible in the County of Suffolk. This local law would repeal the existing Article II of that chapter, which addresses discriminatory acts, and establish new policies and procedures to expand the type of actions that are considered discriminatory and streamline complaint proceedings.

Currently, Article II of Chapter 528 prohibits discriminatory actions in places of public accommodation, resort or amusement, in employment, and in the sale, lease or rental of real property on the basis of group identity. Presently, "group identity", is defined as the race, color, religion, age, national origin, alienage or citizenship status, gender, sexual orientation, marital status or disability of an individual. This law would expand the definition of "group identity" to include the actual or perceived inclusion of a person in any of the above referenced categories and also include familial status[1] and military status as categories of group identity. The definition of "gender" is expanded to include gender identity, appearance, behavior or expression, regardless of its relation to the legal sex of an individual. The definition of "disability" is also changed to protect individuals suffering from alcoholism, drug addiction and substance abuse from discrimination provided they are in recovery and are currently free of such habits.

Beyond these definition changes, the proposed law makes significant changes in the existing areas of prohibited conduct. The changes in the area of employment discrimination are as follows:

- Victims of domestic violence will be afforded protection from existing prohibited discriminatory acts.

---

[1] Familial status is defined as individuals who are pregnant, have one or more children, or are in the process of securing custody of a minor, as well as minors who live with a parent, legal custodian or designee of a parent or legal custodian.

- Prohibit employers, labor organizations, employment agencies and committees on apprentice training from denying, or withholding the right to guidance programs or discriminating against individuals in such programs, based on group identity or domestic violence victim status.
- Prohibit employers from requiring pregnant employees to take a leave of absence unless the employee cannot perform the essential functions of their position and reasonable accommodations cannot be made without causing undue hardship on the employer.
- Protect breastfeeding mothers from being discriminated against by their employer with respect to break time for pumping.
- Require reasonable accommodations to individuals with known disabilities or pregnancy-related conditions in connection with jobs or training programs, unless the employer can demonstrate an undue hardship.
- Prohibit employers from imposing conditions that would violate an employee's religious beliefs, unless accommodations made in good faith fail or the employer can prove making such accommodations would pose an undue hardship.
- Prohibit fire departments or fire companies from discriminating against individuals based on their race, creed, color, national origin, sexual orientation, military status, gender or marital status.
- Prohibit denying an individual a license or employment by reason of a prior criminal offense or finding of a lack of "good moral character" based on such offenses.
- Prohibit, unless specifically required by law or permitted by statute, employers from inquiring about, or acting adversely upon, an individual for an arrest or criminal accusation against such individual that is no longer before the courts, or was terminated in favor of the individual, or for adjudications as a youthful offender.
- Employers will be held liable for the unlawful actions of an employee or agent provided the employer is a supervisor, knew of the conduct or should have known of the conduct.

The following changes would be made to the discrimination provisions associated with places of public accommodation, amusement or resort:

- Expand current law to protect individuals from being discriminated by a place of public accommodation based on their military status.
- Define unlawful discriminatory practice, for the purposes of this section, as: the refusal to make reasonable modifications to facilities unless they would fundamentally alter the nature of the service or constitute an undue burden; the failure to provide auxiliary aids and services to the disabled; the refusal to remove architectural or communication barriers; and the failure to make services available through alternative means if structural barriers cannot be moved.

The following changes would be made to the discrimination provisions associated with real property:

- Add buildings under construction, or not yet constructed, and vacant land to the types of property to which discrimination provisions apply.
- Prohibit discrimination against individuals based on their lawful source of income throughout.
- Prohibit realtors, salespersons, employees, agents or sellers from refusing to make a property available to an individual based on group identity, disability or lawful source of income.
- Amend the definition of reasonable accommodation to include modifications to common areas of a building.

- Prohibit individuals from inducing or attempting to induce the sale of a property for profit by making representations to potential sellers regarding the entry of a particular group into the neighborhood based on their group identity, status or lawful source of income.
- Prohibit persons from threatening the enjoyment of property owned by an individual based upon the individual's group identity, lawful source of income or the group identities of guests or visitors to such property.
- Prohibit real estate brokers, salespersons, employees and agents from refusing to sell, negotiating the sale of real property or representing that an available parcel is not available for inspection, based upon an individual's group identity or lawful source of income.

This law adds two new sections involving discriminatory acts. First, it will prohibit discrimination related to credit. Under the new law, creditors, officers, agents and employees would be prohibited from discriminating against individuals based on group identity when providing mortgage and home loans or when granting, withholding or fixing terms or rates of any form of credit. This law will also ban the use of credit applications that discriminate based on group identity. It would also be unlawfully discriminatory for credit providers to refuse to consider an individual's source of income or discount such income based on the individual's group identity. Discriminatory acts under this section would also include denying an applicant credit under circumstances where others would be approved based on group identity or adding special requirements or conditions for credit that would not otherwise be applied based on group identity. Actions will be considered non-discriminatory if they are based on factual, objective differences, provided the statistics relied on are not based solely on group identity or source of income in determining credit worthiness. Age may also be a non-discriminatory factor if there is a statistically rational relationship between age and credit worthiness. This law also adds a section to protect domestic workers from sexual harassment or harassment based on other characteristics which create a hostile work environment.

This law would also update provisions defining unlawful discriminatory practices. These would include: aiding and abetting in the commission of discriminatory acts outlined throughout the Article, retaliation based on opposition to practices forbidden under this Article, discrimination based on the use of a service animal, interference with the right to enjoy any of the rights protected under the Article and violation of conciliation agreements negotiated with the Human Rights Commission. This section will also allow religious and other organizations to limit participation in their activities to members or give preference to individuals of the same faith when providing services.

In addition to expanding the scope of conduct regulated by Chapter 528, this law also sets forth a more clearly defined procedure for resolving complaints made to the Human Rights Commission. Other changes to the procedures associated with Human Rights Commission complaints are as follows:

- Remove the list of required elements of the Commission's yearly report and individual case investigation reports.
- The requirements for following the determination of probable cause are streamlined to allow the Commission to issue written notice that probable cause exists, and to refer a complaint to an administrative law judge or the New York State Division of Human Rights, if appropriate. The Commission is further authorized to process complaints received from federal or state agencies pursuant to cooperation agreements.
- Remove the current election of remedies, which allows complainants to force the Commission to commence an action in a court of competent jurisdiction within 45 days of the complainant making the election.

- Give the Executive Director of the Human Rights Commission the power to enact appropriate relief according to the facts of the case, including the issuance of cease and desist orders; or ordering the hiring or reinstatement of an employee with or without back pay; ordering that a property be sold without discrimination; ordering compensatory damages or requiring the submission of reports by the respondent on compliance with the decision.
- Authorize the Commission to reopen, vacate or modify orders.
- Authorize the Commission to commence an action for an order to show cause for injunctive relief or a lis pendens on property when the respondent or their affiliates are found to be engaging in activity which renders relief ineffectual. The law also authorizes the Commission to post notice of a complaint on a property that is the subject of dispute or complaint.
- Allow a party aggrieved by a final order of the Human Rights Commission to seek judicial review in Suffolk County Supreme Court within 60 days of service of a final order by the Commission.
- Clarify that civil fines are separate and in addition to any other damages and allows for the development of a fine or penalty payment installment plan for employers with less than 50 employees.
- Authorize the Commission to award attorney's fees.
- Authorize the County Attorney to enforce Human Rights Commission orders, including enforcement of corrective orders.

The new Article II established by this law would apply to all complaints filed with the Commission or by the Commission on or after the effective date of this resolution. This law will take effect 90 days following its' filing in the Office of the Secretary of State.

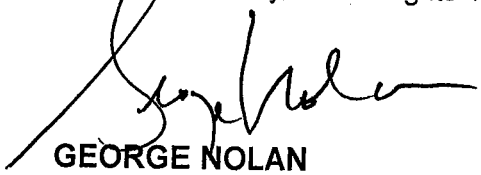

GEORGE NOLAN
Counsel to the Legislature

GN:SS

s:\rule28\28-human rights law discriminatory acts

PRIVILEGED AND CONFIDENTIAL
ATTORNEY-CLIENT COMMUNICATION/ATTORNEY WORK PRODUCT
INTER-OFFICE/INTRA-AGENCY COMMUNICATION
NOT SUBJECT TO FOIL DISCLOSURE/NOT FOR DISTRIBUTION

Proposed Amendments to the Human Rights Law

The changes are being made to ensure meaningful protection of human rights in Suffolk County. The changes will make our local law consistent in most respects with NY State Human Rights Law and will include a process for administrative hearings on all founded complaints of discrimination. Holding the hearings at the County level will enable the County to collect any fines or penalties imposed by an administrative law judge. Currently, in all matters except housing matters*, the Human Rights Commission does the complete investigation, recommends findings, and sends the matter to the State for a hearing. The State then collects and keeps any fines imposed on a Respondent found to have violated the law.

*Only the housing section of the local law, which was amended in 2006, includes an administrative hearing process. (Housing cases are approximately 10% of our caseload, while employment and public accommodations cases comprise approximately 70% of our caseload.)

1) CHANGES

All Sections:

- Adds Military Status as a protected category in all sections (Housing, Employment, Public Accommodations and Credit – matches State HR Law)
- Prohibits discrimination against people with disabilities based on their use of a guide dog, hearing dog, or service dog p.20

Employment:

- Adds Familial Status as a protected category in employment (currently only in Housing Law) pp.8-9
- Adds a protected category for Victims of Domestic Violence in employment only (matches State HR Law) pp.8-9
- Requires employers to make reasonable accommodations for Pregnancy-Related Conditions pp.10
- Prohibits Volunteer Fire Departments and Fire Companies from discriminating based on a limited number of protected categories (matches State HR Law) pp.11-12
- Prohibits certain types of discriminatory practices in employment based on conviction record (matches State HR Law) pp.12

- Details certain circumstances under which an employer would be liable for the actions of an employee or agent p.13
- Adds coverage for Domestic Workers (matches State HR Law) pp. 19
- Removes the 18+ age exception in employment

Housing:

- Adds Lawful Source of Income as a protected category in Housing. (The definition matches NY City Law. However, we provide an exemption for the first two units being offered for sale or rent. NY City provides an exemption for the first five units. Nassau County provides no exemption.) pp.15-18
- Addresses post-acquisition harassment (matches Federal Fair Housing Act Regulations) p.17
- Defines unlawful discriminatory practices for Real Estate Brokers and Real Estate Salespersons (matches State Law) p.17
- Eliminates both parties' ability to elect to go to court following a determination of probable cause prior to the hearing.

Public Accommodations:

- Expands the section to match state law
- Removes age as a protected category in public accommodations (matches State HR law) p.13
- Requires reasonable accommodations be made in public accommodations for people with disabilities (matches State HR law) pp.13-15

Credit:

- Prohibits discrimination in the provision of Credit (matches State HR Law) pp.18-19

Jurisdiction and Procedures – Complaint and Hearing Procedures:

This section is derived from the current housing section of the County Law and it would now apply to all sections. Some modifications were made:

- Provides for a comprehensive administrative complaint and hearing process for all sections pp.20-30
- Provides a mechanism for imposing and collecting civil fines and penalties pp.28-29
- Changes the amount and simplifies the structure of the civil fines and penalties which can be imposed in all cases where probable cause is found (up to $50,000 for engaging in unlawful discrimination, or in the case of willful, wanton, or malicious discrimination, up to $100,000) (matches State HR law) pp.28-29